This is a digital copy of a book that was preserved for generations on library shelves before it was carefully scanned by Google as part of a project to make the world's books discoverable online.

It has survived long enough for the copyright to expire and the book to enter the public domain. A public domain book is one that was never subject to copyright or whose legal copyright term has expired. Whether a book is in the public domain may vary country to country. Public domain books are our gateways to the past, representing a wealth of history, culture and knowledge that's often difficult to discover.

Marks, notations and other marginalia present in the original volume will appear in this file - a reminder of this book's long journey from the publisher to a library and finally to you.

Usage guidelines

Google is proud to partner with libraries to digitize public domain materials and make them widely accessible. Public domain books belong to the public and we are merely their custodians. Nevertheless, this work is expensive, so in order to keep providing this resource, we have taken steps to prevent abuse by commercial parties, including placing technical restrictions on automated querying.

We also ask that you:

+ *Make non-commercial use of the files* We designed Google Book Search for use by individuals, and we request that you use these files for personal, non-commercial purposes.

+ *Refrain from automated querying* Do not send automated queries of any sort to Google's system: If you are conducting research on machine translation, optical character recognition or other areas where access to a large amount of text is helpful, please contact us. We encourage the use of public domain materials for these purposes and may be able to help.

+ *Maintain attribution* The Google "watermark" you see on each file is essential for informing people about this project and helping them find additional materials through Google Book Search. Please do not remove it.

+ *Keep it legal* Whatever your use, remember that you are responsible for ensuring that what you are doing is legal. Do not assume that just because we believe a book is in the public domain for users in the United States, that the work is also in the public domain for users in other countries. Whether a book is still in copyright varies from country to country, and we can't offer guidance on whether any specific use of any specific book is allowed. Please do not assume that a book's appearance in Google Book Search means it can be used in any manner anywhere in the world. Copyright infringement liability can be quite severe.

About Google Book Search

Google's mission is to organize the world's information and to make it universally accessible and useful. Google Book Search helps readers discover the world's books while helping authors and publishers reach new audiences. You can search through the full text of this book on the web at `http://books.google.com/`

WIDENER LIBRARY
HX GZVB E
Digitized by Google

Sci 1490.155

HARVARD UNIVERSITY.

Bought
with an appropriation made by
the Corporation
for books in Engineering.

Received 22 March, 1901.

SCIENCE CENTER LIBRARY

Digitized by Google

Digitized by Google

Digitized by Google

TRANSACTIONS

OF

The Institution of Engineers and Shipbuilders

IN SCOTLAND

(INCORPORATED).

VOLUME XXXV.

THIRTY-FIFTH SESSION,
1891-92.

EDITED BY THE SECRETARY.

GLASGOW:
PRINTED FOR THE INSTITUTION BY
WILLIAM MUNRO, 80 GORDON STREET.
1892.

Digitized by Google

Sci 1190.156

MAR 22 1901
LIBRARY

Engin. Appropr.

Digitized by Google

OFFICE-BEARERS.

THIRTY-FIFTH SESSION, 1891-92.

President.

ROBERT DUNDAS, M.INST.C.E.

Vice-Presidents.

GEORGE HERRIOT. RALPH MOORE. PROF. BARR, D.SC.

Councillors.

JAMES MOLLISON.	ANDREW LAING.
A. S. BIGGART.	PETER DENNY, JR.
JAMES RILEY.	JOHN WARD.
PROFESSOR JAMIESON.	H. A. MAVOR.
JOHN LAIDLAW.	GEORGE RUSSELL.

Finance Committee.

ROBT. DUNDAS, PRES., *Convener.*
A. S. BIGGART.
PETER DENNY, JR.
GEORGE RUSSELL.

Library Committee.

PROF. BARR, HON. LIB., *Convener.*
JAMES MOLLISON.
ANDREW LAING.
HENRY A. MAVOR.

Committee on Papers.

ROBERT DUNDAS. A. S. BIGGART. PROF. JAMIESON.

Honorary Councillors—Past Presidents.

JAMES M. GALE.	JAMES REID.
DAVID ROWAN.	PROF. J. THOMSON, LL.D., F.R.S
HAZELTON R. ROBSON.	ALEXANDER C. KIRK, LL.D.

EBENEZER KEMP.

Honorary Treasurer.—JAMES M. GALE, City Chambers, John Street.

Secretary and Editor of Transactions. } W. J. MILLAR, 261 West George Street.

Honorary Librarian.—PROFESSOR BARR, D.Sc., Glasgow University.

Curator and Librarian—FRANCIS MARTIN, Institution Rooms, 207 Bath Street.

Digitized by Google

Digitized by Google

CONTENTS.

THIRTY-FIFTH SESSION, 1891-92.

	Page
Office-Bearers,	iii

PAPERS READ.

Address by the President—Mr Robert Dundas, M.Inst.C.E.,	1
On Ruthven's Jet Propeller—by Mr John R. Ruthven,	15
,, Brown's New Rotary Expansive Steam Engine—by Professor Jamieson, F.R.S.E., etc.,	33
,, Electricity in its Relation to Mining—by Mr Ernest Scott, London,	73, 277
,, Professor Wiborg's Air Pyrometers—by Mr John Crum,	123
,, Some New Forms of Bends and Junctions in Tubular Construction—by Mr J. Millen Adam,	151
,, Limes and Cements—by Mr Alexander M'Ara,	161
,, The Electric Motor: a Practical Description of the Modern Dynamo Machine, more particularly as a Motor—by Mr W. B. Sayers,	199
, A New System of Electrical Distribution and Transmission—by Mr Rankin Kennedy,	221
,, Priestman's Oil Engine—by Mr M. B. Mountain,	251
James Watt Anniversary Dinner,	284
Minutes of Proceedings.	285
Treasurer's Statement.	294
Deceased Members,	301
Report of the Library Committee,	311
Donations and Additions to Library,	311, 313

Digitized by Google

Page

List of Members, ... 321

Index, ... 361

PLATES.

Ruthven's Jet Propeller, ... I.

Brown's Rotary Engine, ... II.

Electricity in Relation to Mining, ... III., IV.

New Forms of Tubular Construction, ... V.

The Electric Motor, ... VI.

Electric Distribution and Transmission, ... VII., VIII.

Priestman's Oil Engine, ... IX., X.

Digitized by Google

Premiums Awarded

FOR

PAPERS READ DURING SESSION 1890-91.

THE RAILWAY ENGINEERING MEDAL

To Mr Thomas M. Barr, M.Inst.C.E., for his paper on "The Renewal of Railway Viaducts and Bridges on the Northern Division of the Caledonian Railway, 1880-88."

PREMIUMS OF BOOKS

To Professor Jamieson, for his paper on "The Electric Lighting of Public Buildings."

To Mr John Laidlaw, for his paper on "Centrifugal Action in Practical Work."

To Mr Henry A. Mavor, for his paper on "The Development of Electric Distribution."

Digitized by Google

The responsibility of the statements and opinions given in the following Papers and Discussions rests with the individual authors ; the Institution, as a body, merely places them on record.

Digitized by Google

INSTITUTION

OF

ENGINEERS AND SHIPBUILDERS

IN SCOTLAND.

(INCORPORATED.)

THIRTY-FIFTH SESSION, 1891-92.

Inaugural Address.

By Mr ROBERT DUNDAS, M.Inst.C.E., President.

Read 27th October, 1891.

GENTLEMEN,

On taking the chair on the opening meeting of the Thirty-Fifth Session of this Institution, I have to thank you for the honour conferred upon me, in electing me to fill such an important position. The chair is held alternately by a Mechanical Engineer, a Shipbuilding Engineer, and a Civil Engineer, and it is in the ordinary rotation as a Civil Engineer that it falls to my lot on the present occasion to be your President. Under each of those great divisions you have had many eminent men as Presidents, and I am deeply sensible of my own imperfections when I consider the merits of those whom I have to follow.

You will have observed from the recently issued volume of the Transactions of the last session that the Institution continues to

Digitized by Google

prosper. At the close of last session we had a total membership of 686, made up of 12 Honorary Members, 17 Life Members, 433 Ordinary Members, 32 Associates, and 192 Graduates.

We have, however, to deplore the loss of 10 Members and 2 Graduates through the hand of death, abridged memoirs of those appear at the end of the Volume. Some of them were removed at a ripe old age, having well fulfilled their place in this world, and others were removed apparently in the midst of their usefulness. We have specially to regret the loss of Professor Philip Jenkins, who had been elected one of the Vice-Presidents of the Institution, and took an active share in its management, attending the meetings with great regularity, and taking part in the discussions on the papers read.

We require a considerable number of new members every year to make up for the loss in numbers we sustain in this way, and to maintain a steady increase. In this great active community and centre of engineering in Scotland, and in other cities, there are still many who might become members if they understood the advantages of the Institution; and the Council would press upon all members the importance of furthering the active life of the Institution, by attending the meetings themselves as frequently as possible, and by inducing others who are not members to join. The Library and Reading Room should be an inducement and of great value especially to the younger members. The best engineering books that can be got are added to the Library year by year.

The Graduate Section, consisting as it does of young men, apprentice engineers and shipbuilders, might be considerably strengthened if the great advantages of the Section were more prominently brought by the members before those in their employment; and the Associate Class might also be increased by additions from those who, although not engineers or shipbuilders, yet from their connection with those branches are eligible for election, as such.

The contribution of papers is also a very important matter, the reading of them, and the discussion following thereon is the very

Digitized by Google

life of the Institution; and I need hardly remind you that Medals and Premiums of Books are awarded for the best papers. There is an Institution Medal, a Marine Engineering Medal, and a Railway Engineering Medal; also, a Medal for the Graduate Section, and when no Medal is given there is always a Premium of Books for a paper of sufficient merit. Sometimes it is found that the most meritorious papers of a session are by those who have previously been awarded a Medal, and in those cases the Premium of Books is awarded.

The subject of railways may well come in for some notice, holding as they do a very important place not only amongst engineers in general, but entering more than any other enterprise on which engineering skill is required into the life of every one in civilised countries. Shipbuilding and marine engineering are quite as important, and have made perhaps greater strides in improvement, but have not entered so generally into the lives of the inhabitants of the civilised world.

It is not many years, however, since the idea of railways dawned upon mankind. No doubt 215 years ago a sort of tramway was formed at Newcastle, one at Tranent 166 years ago, and another of iron at Sheffield Colliery about 115 years ago, but we do not find a railway company until 1801. England was of course their cradle, but Scotland was not far behind, for in 1810 the Kilmarnock and Troon line was opened. Progress was slow to begin with, then very rapid, and for the last 20 years has been fairly uniform. The mileage in the United Kingdom may now be taken at about 20,100, and the capital expended £898,000,000. This mileage is no doubt fully exceeded on the North American Continent, the United States alone having about eight times more, and Europe nearly half as much as America; but I need not weary you with details. The railway is suited for every clime, outside the arctic circle, and outside of that forbidding region is making way in every civilised and uncivilised country.

In this country, where the conditions are extremely favourable, both as regards materials and fuel, the cost of construction has been

Digitized by Google

enormous. Here lands have to be purchased at great cost, bridges to be built where others have only level crossings, expensive gates to be provided for level crossings where others have only a balanced pole or sliding bar, streets to be tunnelled under where others allow the trains like tramcars to run on the surface, raised platforms to be provided where others only plank between the rails; and all this where the inhabitants consider themselves quite as civilised as we do in this country. The Americans have certainly given us a good example in railway carriages, and the introduction of the Pullman car into this country greatly stimulated the improvement of our long journey carriages; but in the matter of permanent way and substantiality of road this country has always held the lead. We began substantially, of course, under different conditions, and have gone on regularly improving, increasing the weight of rails from time to time to give them longer life, and putting the increased weight on the wearing surface so as to get the full value of it.

The improvement in the manufacture of steel, and its production at a moderate price, has also enabled the railway companies without excessive cost to improve their lines and attain the high speed of train service which is now common on the principal railways in this country. Not only are passenger trains run at higher speed, but fish trains, dead meat trains, and long distance goods and mineral trains are run with greater expedition.

For such a service not only is a good, sound road of the best class necessary, but the rolling stock requires to be of the best quality, and the locomotive of ample power; great progress has also been made in this respect. Locomotives are now built with boilers having much greater heating surface, and with higher pressure whether for the simple or compound. On some lines, both at home and abroad, the compound locomotive is used, principally in this country by the London and North-Western on the West Coast route, and by the North-Eastern Company on the East Coast.

In the general result the improved uncompounded engine seems still to hold the command. The compounds appear to do well enough on an easy gradient line with a moderate load, but do not

Digitized by Google

maintain speed so well on steep inclines, and, so far as my observation goes, are still bad starters. There is no reason to despair altogether of their being so improved as to beat the best examples of the uncompounded. It was only in 1878 that the subject was really seriously taken in hand, and perhaps the next so-called monster compound from the works at Crewe, which is both to be a good puller and a racer, may turn out also to be a good starter and be ahead of the uncompounded for real hard, practical work.

While on this question it might be as well to take some note of speeds. I do not mean the average speed on a long journey, such as between Glasgow or Edinburgh and London, this we all know to be about 45 miles an hour, or 55 on some of the longest runs without stopping; but what is the greatest speed possible to be attained by a railway train in motion? Sixty miles an hour we know to be quite common even on a level line, and 75 miles an hour may be said to be an every day speed on certain portions of the main trunk lines of this country, where everything from the foundation up to the highest class of rolling stock makes it quite as safe as on some lines at little more than half that speed. Yet it is apparent there is, and must be, an absolute limit on ordinary inclines. It cannot be like that of a heavy body falling freely through space; it cannot be even 1000 miles an hour. It is limited by the resistance of the atmosphere, and by the friction on the rails. Up to a certain speed the wheels can keep pace in their revolutions with the speed of the train, but whenever the speed of the train is greater than the wheels can keep pace with, they commence to skid to a certain extent, and a counteracting break force sets in to check the acceleration of speed. So far as can be judged now, this maximum speed cannot be much beyond 90 miles an hour. It has been stated that 86 miles an hour has been reached on the North-Eastern Railway, with one of that company's compound engines. The Americans, however, who like to beat everything, and can do so with many things when they have a mind, lay claim to having beaten us in speed.

On the Philadelphia and Reading line, on a run of 12 miles, the

Digitized by Google

train consisted of 3 cars weighing about 76 tons, and an engine and tender of 74 tons, driving wheels 5 feet 8 inches diameter, and cylinders 18½ inches diameter, and 22 inches stroke. The gradients ranged from 1 in 143 to 1 in 1000 in favour of the train; to 1 in 156 to 1 in 666 against the train. The speed on 3 of the miles varied from 75·3 miles an hour to 77·9 miles an hour, the others were all 80 miles an hour and upwards, while the 9th mile is stated to have been done at 90 miles, and the 10th mile at 90·5 miles an hour. The train was a light one and the engine powerful, and we may take it that the utmost speed attainable under the circumstances was endeavoured to be got.

On a long down hill grade of say 1 in 75 it might be possible to beat this record, and it might be done by a little; but it would be exceedingly imprudent to try it, and I think engineers may be fairly content to assume that from what has already been accomplished, a maximum speed of 95 miles an hour may be taken as the highest attainable by a train, but too great for even experiment in this country where the value of human life is rated so high, even the high speeds which are at present run, being sometimes somewhat trying to nervous people, and really fast enough for all practical purposes.

Railways in progress always command considerable attention, and I think the first place may be taken by the Glasgow Central Railway, a work of special interest and difficulty in respect that a large portion of it has to be constructed at such a low level, and at the same time along the centre of some of the most crowded streets of the city. It has caused the construction of a large system of sewerage at the expense of the railway company, which will be a great benefit to the city and saving to the ratepayers, and may well induce some of the patience and forbearance of the citizens with the temporary inconvenience inevitably connected with the construction of a railway in such a position, while, when it is completed and opened, they will have the advantage of another means of speedy transit from point to point.

Digitized by Google

With stations at Dalmarnock, at Bridgeton Cross, at Greenhead, at Glasgow Cross, at the head of Jamaica Street in Argyle Street, at Anderston Cross, at Stobcross, at Kelvin Bridge, at the Botanic Gardens, at Kirklee, and at Maryhill, it may well be reckoned a line of the greatest convenience, somewhat similar to the London Metropolitan, and in due time we may see the condensing locomotive running in Glasgow.

Of a different class entirely is the West Highland Railway, where the works, although some of them are rather heavy, are entirely in the open, along the quiet hillside and through the bleak moor, where landlords and tenants are few, and extend over long stretches. The works on that line were prosecuted with great vigour for a time, but have been languishing of late, and rather giving employment to the legal profession. It will probably in the end cost more to complete than was at first anticipated.

On the east side of the country, which has had great attractions for engineers for some years past, on account of the Forth Bridge, now in full operation, but still a great feature of interest, as well it may be to many, being in this country for sightseers something resembling what Niagara is to the Americans. There will be for a year or two to come rather heavy work in the widening and improvement of the Waverley Station, and the lines to the west of it as far out as Corstorphine. That this was absolutely necessary has been patent to observers for a considerable time, and when it has been completed those who have been so fearful about the Princes Street Gardens being spoiled, will hardly know the difference viewed from the street. It will be rather a difficult piece of work to tunnel below the National Gallery, on the Mound, where the ground is forced material; but the additional Haymarket Tunnel will be principally through rock, and will present no special difficulties.

The Caledonian Company are also building a new passenger station at Edinburgh, on the site of the old temporary wooden one. This is one of the most commanding situations for a railway station, being at the west-end of Princes Street, with an open view along

Digitized by Google

the valley all the way to the Calton Hill. The walls are of the red Dumfriesshire stone, which stands the weather well, and the roof of steel, timber, and glass. The platforms will have the great advantage of being on the level of the street (they are slightly above it now), and the whole station will be on a curve, which will rather add than otherwise to its appearance. No one can doubt that the stations at York and Newcastle look better curved, as they are, than if they had been straight. Gourock also, taking a smaller example with which we are, no doubt, mostly all more familiar, has its appearance enhanced on account of the curve.

In the north-west of Scotland special attention has been directed to railways for the development of that district, and for the relief of the crofter and fishing populations. It is most desirable that this should be done; and this summer, a special commission consisting of Major General Hutchinson, C.B., one of the most experienced railway officers of the Board of Trade; Sir George Nares, the distinguished navigator; and Mr Henry Tennent, late General Manager of the North-Eastern Railway, was sent down by Government to visit the district and examine it and report. They will, no doubt, be able to make a recommendation of what is the most suitable route, but we will have no opportunity of knowing until after Parliament assembles; we may, however, rest assured that the best will be done by such eminent authorities.

Of projects of great magnitude, those for crossing the English Channel at the Straits of Dover are not being lost sight of. The three schemes are:—

A tunnel underneath the Straits, through the solid chalk.

A submarine tubular railway laid on the bed of the channel; and a high level bridge similar in character to the Forth Bridge.

That any of the three are quite feasible, engineers will hardly doubt. A sufficient amount of money will erect any one of them, or all three for that matter, but it is hard to decide which of the three would be the most suitable. I am inclined to consider that the oldest scheme is the best, viz., the tunnel underneath, and it will likely be sanctioned some day, but I am sure, with the great

Digitized by Google

improvement in steam vessels, that many would always prefer the open sea in a good boat, as I would myself, to travelling by any of them.

The greatest work at present in progress in this conntry, and which, next to the Forth Bridge, has attracted the attention of engineers, is the Manchester Ship Canal. It has been referred to by our President on former occasions, but it is of such importance that it cannot well be passed over even now. Its construction has been carried on with remarkable vigour, and part of it is now opened—about a third of it, at the lower end, as far up as the River Weaver—but there is still a large amount of work to do, and I apprehend it cannot be completed at the earliest before the summer of next year, if not later. Our famous townsman, Sir William Arrol, has still in hand some of the large steel bridges for carrying the railways over the canal.

Whether when completed it will be a financial success is very problematical. The Manchester people have supported it well, have shown themselves determined not to let it stick for want of funds, and it will be saved at least from the fate of the Panama one.

We have not heard much lately of the local project for a large canal between the Forth and Clyde. It differs from the Manchester one in that it would be of some strategetic importance if made of sufficient size to accommodate vessels of war. The subject will no doubt be revived, but it would be better to wait and see the resul of the complete opening of the Manchester one. Should the latter turn out to be a paying concern, then there would be much surer ground for the capital being subscribed, and it would not lack the support of investors.

On the subject of docks and harbours a great deal might be said, but I will treat it very briefly. On the River Clyde there is continued activity and improvement manifested both in deepening the river and extending the harbour, but the subject of the purification of the river has only just been touched. The problem has been simplified considerably by the extension of the city boundaries, and

Digitized by Google

would have been further simplified by the inclusion of Partick, Govan, and Kinning Park. We may well wish for the success of what is being done to treat the sewage at the east end, and that from this small beginning will speedily grow the treatment of the whole.

The new Dock and other Harbour Works at Ardrossan will be opened next month. The dock has a depth of water of 25 feet to 27 feet, varying according to the tide, and 2430 feet of quay, while the outer basin has 1550 feet of quay. Hydraulic coal tipping machinery has been provided, with high level lines of rails to admit of the empty waggons running freely from the cage without obstructing the approach of the full waggons, similar to what is in operation at the Grangemouth Dock. This harbour is favourably situated on the open firth, comparatively free from fogs, and is well equipped for a large trade.

The past spring and summer was a particularly dry one, and brought home to most communities the necessity for an abundant and reliable supply of good water. Happily situated as we are in Glasgow in this respect, even here we were threatened with a restricted supply, but in many villages and small towns there was no good water to be got, and even in places with modern gravitation supply there were many complaints of shortness. This is certain to produce a great addition to water schemes for the supply of various districts, and is a subject engrossing the serious attention of County Councils. It is well known that when people get accustomed to good gravitation water that they use it more and more freely, and it is not wise, in providing supplies, to look merely to present wants, or a few years to come, with a small allowance per head of population of say 30 gallons, and with a small storage. What we have had this year in regard to dry weather will certainly occur again sooner or later, and probably even greater drought, and should not now be forgotten, or thought lightly of, after the abundance of rain has come.

The great works for the additional supply to this city are advancing apace. The additional supply, 70 million gallons a day,

Digitized by Google

which is being provided for, should be ample for the wants of Glasgow and suburbs for many years to come. Liverpool and Manchester are also somewhat similarly situated with regard to their great schemes.

In regard to bridges, Glasgow is somewhat similar to London, having a considerable river flowing through it—we can even now say with more than one river. This has from time to time given opportunity for engineering skill in designing bridges. The frail, wooden structure at Dalmarnock Road has now been replaced by a strong stone and iron structure of 5 spans, and 50 feet wide between the parapets; it was opened during the summer, and was designed by Messrs Crouch & Hogg. The same engineers have in hand a 3 span stone bridge to replace the existing bridge at Rutherglen, and to have a width of 60 feet between parapets, at a cost of between £50,000 and £60,000. Then we have the recently opened Kelvin Bridge, an elegant and strong structure, with stone piers and abutments faced with granite, and arched cast-iron ribs, similar to the Kelvin Bridge on the Partick Road, and the Albert Bridge on the Clyde. It is an example of a square bridge over an oblique stream or river, which is not at all unusual, but in this case one of the piers obstructs the water-way in rather an awkward manner, and for which there seems to be no sufficient reason. It would have been avoided by setting the piers somewhat in the run of the line of the stream, making oblique circles, no doubt, but in no way detracting from the appearance, and meeting the requirements of the water-way below as effectually as has been done with the road-way above.

The well known Broomielaw Bridge has been attracting a great amount of attention lately, and has been before the public as a subject either for widening or reconstruction for the last 16 years. It is not a very old bridge after all, having been built only some 58 years ago, and if its foundations had only been carried deeper, it might have lasted for many generations yet to come; but it is also too narrow for such a great main thoroughfare, and any consider-

Digitized by Google

able sum spent on widening it without reconstruction would be wasteful. The railway bridge alongside of it was sunk by cylinders quite easily through the sand to the solid rock, some 75 feet below the bed of the river, and the piers of any future bridge should be similarly sunk by cylinders in groups, and the spans should be fewer than seven. The Albert Bridge, which is a beautiful structure, has only three, and the Victoria Bridge, at the foot of Stockwell Street, five.

It does not seem to be an insurmountable difficulty to reconstruct it without the expense and inconvenience of a temporary bridge, which must, in any case, be equal in width to the present one, to enable the traffic to be carried on. The present bridge is only 60 feet in width, and the new one would not be too wide although it was 120 feet. Thirty feet, or say a little less, so as not to disturb the present parapets in the meantime, could be added on each side of the present structure, and when those two new portions were completed and ready for traffic, they could be opened to the public, and then the old bridge shut up and taken down, and the centre portion of the new bridge dealt with. This would give, with the minimum of inconvenience, a complete new substantial bridge, worthy of the situation in which it is required, and worthy to be known in the future, as the present has been known in the past, as the *Glasgow* Bridge.

In marine engineering and shipbuilding, while the amount of business done, and the tonnage of vessels built, may vary from time to time, there is a continued advance made in construction and equipment, from the smallest yacht to the great ocean-going steamer or vessel of war. To India, to Australia, to Africa, and to America, demands are made for greater speed, and greater comforts and luxuries on board ship, and efforts are never wanting to meet them. I think I am right in saying, when we think of the "Citys," of the "Scot," of the "Orion," and of the new Cunarders, and many other earlier examples, that to the Clyde comes the lion's share of the high-class work.

Digitized by Google

The swift steamer, while the most popular, seems also to be the safer one; and although the Atlantic has not yet been crossed in or within the 5 days, there can be little doubt that such an event is not far from accomplishment, and may be coincident with the opening of the World's Fair in 1893.

In 1893 will be held America's great exhibition at Chicago, under the title of the World's Columbian Exposition. In connection with this, the members of this Institution have been invited by the Executive Committee of the General Committee of the Engineering Societies of the United States and Canada, to co-operate with them in holding an International Engineering Congress, under the auspices of the Exposition; they also intend to invite to this Congress the entire engineering profession of the civilised world.

A series of Congresses will be held during the whole six months, from the 1st of May to the last of October, and in this series of Congresses, engineering will be considered of sufficient importance to be made a department by itself, and it is intended to embrace, under "engineering," subjects pertaining to the construction of railways, canals, tunnels, river and harbour improvements, water works, sewerage and drainage, bridge, and other structures, also mechanical, mining, metallurgical, military, marine, and naval engineering. It is hoped that there will be a sufficient number of papers on all these, and related subjects, and a sufficient number present at the Congress, which will last from 6 to 8 days, to divide into sections, at which the papers will be read and discussed.

No doubt many members of this Institution will be visiting this latest great exhibition, and will be glad to co-operate with other engineers in the Congress.

The Americans naturally wish to surpass all previous Exhibitions. They possess great inventive talent and enterprise, and I am sure will make this great Exhibition well worthy of a visit, and will attract many from all the ends of the earth to it.

In conclusion, I would say, that by the combined skill of engineers, shipbuilders, and men of science, time and space on this little globe which we inhabit are being made the most of. The

Digitized by Google

solid land is being girdled by railways; rivers and arms of the sea are being bridged over and tunnelled under. Seas and oceans are traversed by swift steamers; all peoples and tongues are brought every year nearer and nearer together. Swifter and more potent than any is that once mysterious electric power, now better understood, and tamed to be the handmaid of man, obedient to his touch for speech or light; attending the railway trains on their journeys, and ministering to those who travel in floating palaces on the mighty deep.

On the motion of Mr Ralph Moore, a very hearty vote of thanks was awarded the President for his address.

Digitized by Google

Ruthven's Jet Propeller.

By Mr JOHN R. RUTHVEN.

(SEE PLATE I.)

Received 19th; Read 27th October, 1891.

THE object of the following paper is to describe the trials of the system of hydraulic propulsion invented by my father, Morris West Ruthven.

It is long since these trials were made, and the impression has gone forth that it was more or less a failure.

The experimental trials made were those of the "Waterwitch," a gunboat built for the Admiralty, with the purpose of comparing the propelling and manœuvring power of the jet with the screw. For this purpose two screw ships, the "Viper" and "Vixen," twin screw vessels of about the same tonnage, and same midship section, were built as fair competitors with the jet propelled "Waterwitch."

The water jets are obtained by a centrifugal pump which takes its supply from the sea, or, in case of heavy leakage, from the hold of the ship. The centrifugal wheel is placed horizontally in the ship, and is driven direct by steam engines working horizontally.

There is an arrangement to reverse the direction of the discharge of the jets, so that the vessel can be propelled ahead by discharging the water astern, or astern by discharging ahead, or the jet at one side of the vessel may discharge ahead, and on the other astern, in this case the ship neither goes ahead or astern, but turns round in her own length.

The twin screw vessels, "Viper" and "Vixen," and the jet

Digitized by Google

propelled "Waterwitch," are uncommon ships, all of the same midship section, and nearly same displacement. The twin screw vessels had double stern posts and two rudders at the stern, the "Waterwitch" had two rudders, one at the bow and one at the stern, each working in a heavy frame, intended to be used as a ram, at either end. This must have caused considerable increased obstruction, and as the ship is longer, on account of these rudders and frames, more difficult to turn in her own length.

In 1863, it was decided, by the Admiralty, to test the water jet on a large scale.

Some time before this date, the Admiralty had been satisfied on the feasibility of my father's plans, by themselves making and applying the jet, in an old screw gun boat, the "Jackdaw," at Devonport; by means of a series of teeth wheels and shafts, working from the old screw shaft to the pump, which had only one outlet led to one side of the ship. With this imperfect arrangement the ship was propelled, and a speed was attained which satisfied the Admiralty, that it gave promise of a success.

The screw vessels, "Viper" and "Vixen," were completed first, and tried on the measured mile, with results that might have been expected. Taking the two twin screw vessels, the average result of all the full power trials on the Thames measured mile, gave a co-efficient of 313·3 from the formula $\frac{S^3 \times M.S.}{I.H.P.}$

The trials of the jet propelled vessel followed in the winter after the summer in which the screw vessels were tried. The result of the average of the full power trials gave a co-efficient of 335·2. This at once shows a superiority for the jet of 6·99 per cent. above the twin screw.

313·3 : 335·2 : : 100 : : 106·99.

After this, these three ships were taken to Portsmouth to be again under trial.

At the Stokes Bay measured mile, when the screw vessels were tried, a most remarkable change was noted in the results of the

Digitized by Google

"Viper," the speed was considerably higher than previously, at the same time the power was very much lower than on former trials, giving as a result an advance of 39·9 per cent. in the co-efficient above the average of all previous trials.

313·3 : 438·5 :: 100 : 139·9 ;

while the average results of the jet on trial were about the same as on the Thames measured mile.

The method of treating these results now came to be a question of very great importance. The Admiralty evidently selected the best trial of the better twin screw vessel, and compared it with the best trial of the jet propelled vessel.

As the trials of the twin screw vessels were all apparently equally reliable, an average of all the trials should give a more correct result, seeing that the screw vessels varied 59·1 per cent. from the highest average result of trials to the lowest average result of trials.

275·6 : 438·5 : 100 : 159·1.

Such a great range of variation of results should have suggested something wrong.

When the great variation in the results of the two twin screw vessels was observed, it became necessary to discover if this was the usual performance in the Navy with screw vessels. For this purpose, a somewhat similar class of new vessel, four in number, was selected by Mr Ruthven, for comparison with the "Viper" class. The four vessels were each of less displacement, greater length, and less beam. From the full power trials of these vessels it will be seen that the extreme variation, from highest to lowest result, is 20·9 per cent.

272 : 329 : 100 :: 120·9.

Again, at full power trials, the power to drive these vessels shows a result, that if we compare them with the Admiralty selected trial of the "Viper," the strange result comes out, that the "Viper" is a much better ship for propulsion than the "Philomel" class (that is, that the "Viper" is more easily propelled than the "Philomel" class); so that a difference of more than 50 per cent. in the midship section shows practically no difference in the resistance. If this

Digitized by Google

can be accepted as a fact, then such comparative results are very misleading.

Another point of importance may be noticed. The "Viper" at one trial gave out 707 I.H.P. for 9·168 knots; and when hard pressed, and going 9·475 knots, with a larger cross section, the indicated horse power was given as 652.

It is of importance to note, that the results of the first trials of the "Viper" class corresponds with the average results of all the trials of the "Philomel" class, that is, the co-efficients from the midship section are nearly alike, thus showing the vessels to be equally good for propulsion per square foot of midship section. It being granted that the vessels are equally good for propulsion, the power to go the speed must be in proportion to their cross sections. This at once shows that the Admiralty selected trial must have had about 1000 I.H.P., and not 652 as given in the reports of trials of "Viper" class, and this result nearly agrees with the results of trials which took place before the first trials of the jet propelled vessel.

Again, when the comparison of the "Viper" class is taken with the "Philomel" class, and granting that they are equally good for propulsion per square foot of midship section, the result is an average co-efficient, from the midship section, of 298·7, and this, compared with the average co-efficient from the midship section of the water jet vessel, shows the water jet superior to the screw by 12·25 per cent.

298·7 : 335·3 :: 100 : 112·25.

The turning experiments will now be examined. They were conducted in the following manner. The twin screw vessel had one screw driving ahead and the other driving astern. The result of this was that the vessel performed a circle, thus running nearly end-on through the water, due to the *ahead* screw being more effective than the *astern*. The water jet vessel had one jet discharging astern and the other discharging ahead, thus twisting the vessel round on her centre, a manœuvre impossible with the twin screw. But twisting a vessel broadside through the water, although it may be sometimes useful, is a very different thing, and takes longer time

Digitized by Google

than propelling a vessel nearly end-on in a circle. Yet on these two trials alone, which were made under such widely different conditions, the Admiralty stated that the water jet vessel seemed inferior for manœuvring.

In the turning experiments by means of the rudder, the "Waterwitch" took longer time than the "Viper" to make a circle, showing that the "Waterwitch" was a more difficult ship to turn, and this might have been expected, as she was 12 feet longer than the "Viper." The rudder frame at the stern must have added greatly to the difficulty in steering, and also made the twisting on her centre take longer time than if she had been the length of the "Viper" and been fitted with a rudder in the ordinary way.

The details of the trials having been given, we may ask if it was a just conclusion, in deciding to take the highest result of one twin screw vessel, instead of an average result; and in accepting a result as true which was 36·3 per cent. above a trial which was equally reliable, in the same vessel.

Again, when a ship of acknowledged bad propulsive properties is stated to be 50 per cent. better than an acknowledged good class of ship, some further tests might have been made if the average results are not accepted. Even average results are not true results when the variation of each day's trial is so excessive.

It may be asked, if the engines of the "Viper" really gave out 1000 I.H.P. why did the water jet engines not do the same, as they were certainly intended to be of equal power. This is one of the most notable points in the whole trials. The power was supplied by two boilers in each vessel, therefore when one boiler was used, half power should have been indicated by the cards. Here a strange point occurred in the water jet vessel. When the full power was given as 828 I.H.P., that is, the power of two boilers, the indicated horse power from one boiler was given at 228 I.H.P. Here then is a point which must be investigated. Why was the power from one boiler so small as compared with the power from two boilers?

This point was not overlooked by the designer of the water jet, for he applied to the Admiralty for leave to test the evaporative

Digitized by Google

power of the boilers. This was done in a rough way by taking the time of the decrease of water in the boilers while the engines were working at full power. This was found to be at the rate of about 654 cubic feet per hour. This quantity of water in the shape of steam is certainly good for much more than 1000 I.H.P.; but only 828 I.H.P. was indicated, for which less than 300 cubic feet is enough, showing that more than 300 cubic feet was lost somewhere. If 300 cubic feet were lost at full power, 220 cubic feet would likely be lost at half power, thus leaving only 80 cubic feet to be accounted for by the cards at half power.

That the boilers were not leaking was proved. It therefore remained to be proved that the leakage took place in the engines, and that it was in the shape of steam.

This matter was disputed by the Admiralty, they stating that the disappearance of the water from the boilers did not prove that it left the boilers in the shape of steam.

This can, however, be proved independently of the proof afforded by the decrease of water in the boilers and freedom from leakage in the boilers. Leakage may be proved to be in the engines, and that the boilers actually did evaporate above 600 cubic feet of water per hour. The indicator card showed that, with these engines to produce the full power, 828 I.H.P., about 300 cubic feet of water in the shape of steam must have been supplied by the boilers. It follows, therefore, from this, that, at half boiler power, 150 cubic feet of water in the shape of steam must have been supplied to the engines; but the indicator cards show that not more than 80 cubic feet of water in the shape of steam is accounted for, therefore at half power there must have been the difference between 150 and 80 in leakage, and as the leakage is thus shown to that extent at half power there must have been still more at full power. But if there was leakage at full power it will leave still more to be accounted for at half power, and so on. Thus, nothing possibly can account for the half power being so much less than it ought to be, except the fact that the boilers really supplied about 600 cubic feet of water in the shape of steam.

Digitized by Google

The case at the full power would then stand thus:—600 cubic feet supplied by boilers, 300 of which is accounted for by work done, and 300 by losses and leakage. And at half boiler power thus:—300 cubic feet supplied by boiler, 80 of which is accounted for by work done, and 220 by losses and leakage. The loss and leakage is necessarily less at half power, as the pressure to produce 228 I.H.P. was much less than to produce 828 I.H.P.

These results seem to prove that the engines of the water jet vessel were leaking heavily, leading to a consequent loss of power.

An important point in connection with the jet as a propeller must be noted, that is, its power in stopping the vessel. This was tried with the "Waterwitch," and from going full speed ahead the order was given to reverse the action of the jets, and the vessel was stopped in nearly her own length. This was ascertained by throwing a billet of wood square from the bow on the order given to reverse the jets, and the ship was stopped when the floating billet was level with the stern. This is a very remarkable property, which the screw cannot approach.

This power of quickly stopping and reversing a ship's headway, must be of great importance to the safety of the ship, by enabling her in many cases to avoid collisions which the continual increase of speeds makes more and more dangerous. In passing, it may be remarked that the great stopping power is a proof of the efficiency of the water jet as a propeller, the value of which is obvious in quickly stopping and backing, while, with the great power of turning, there is no danger from loss of steerage way, as the ship can be effectually steered by the jets when she has little or no way on her, at which time, of course, the rudder is of little or no use.

The resistance of the "Viper," "Vixen," and "Waterwitch" was not tested; but it is evident that it must have been great in proportion to their tonnage. As an estimate I take the screw ship's resistance to be equal to 40 per cent. of the engine power, and I take the co-efficient from the midship section to be the same for the "Viper" class as for the "Philomel" class—

Digitized by Google

$$\frac{\text{M.S.} \times \text{Speed}^3}{\text{I.H.P.}} = 298{\cdot}7,$$

and the mean speed at 9·3 knots, and cross section = 336 square feet—

$$\frac{336 \times 9{\cdot}3^3}{298{\cdot}7} = 905 \text{ I.H.P.},$$

and 40 per cent. of this indicated horse power = 362 I.H.P., which equals a propelling force of 12,845 lbs. at 9·3 knots.

$$\frac{362 \times 33{,}000}{930} = 12{,}845.$$

The resistance of the "Waterwitch" may be taken at the same, and the comparison will now stand thus: the efficiency of the screw in the "Viper" 40 per cent. of the indicated horse power; the efficiency of the jet 44·9 per cent. of indicated horse power—

$$298{\cdot}7 : 335{\cdot}3 :: 40 : 44{\cdot}9;$$

so that this comparison shows the jet to be 12·25 per cent. superior to the screw—

$$40 : 44{\cdot}9 :: 100 : 112{\cdot}25.$$

Instead of comparing the value of the jet *versus* the screw in the way now done, which involves the accuracy of the indicated horse power, a comparison may be made of the values of the propellers in the "Viper," "Vixen," and "Waterwitch." Suppose all three vessels had the same power, as they were intended to have. Take the highest speed attained by each vessel; compare the cubes of the speeds for the value of each propeller.

Highest speed of "Waterwitch," 9·909 knots.
" " "Viper," 9·58 "
" " "Vixen," 9·21 "

$$9{\cdot}58^3 : 9{\cdot}909^3 :: 100 : 110{\cdot}6.$$
$$9{\cdot}21^3 : 9{\cdot}909^3 :: 100 : 124{\cdot}5.$$

Jet above "Viper," 10·6 per cent.
" "Vixen," 24·5 "

The engines of the screw vessels were in good order, as is shown by the half power being, on an average, practically half power. It

Digitized by Google

has been proved that the engines of the "Waterwitch' were leaking, so that we may safely consider that the screw engines were able to give out more power than the "Waterwitch" engines, why did they not get the same speed? It can only be accounted for by the jet being superior to the screw, and getting a larger percentage out of the power applied to it.

It may be said that better results are now obtained in the economy of propulsion than is shown by the results of the "Viper" and the other ships used in this comparison; but these better results are due entirely to the form, size, and speeds of the modern vessels, as it is well known that 40 per cent. of indicated horse power is the utmost that can be obtained from the screw.

Having now given the practical facts, and what may be deduced from these trials of jet *versus* screw, some opinions of scientific and practical men as to its theoretical possibilities and its practical working may be added.

Professor Rankine, speaking before a meeting at the Royal United Service Institution, on a paper by Andrew Murray, Esq., C.B., read 29th May, 1871, said:—"It is very unfortunate that I was unavoidably detained, so that I have not had the advantage of hearing Mr Murray's paper. Then as regards the action of the turbine propeller, I am also, unfortunately, in this position, that I have had no practical experience of its use. From something that fell from Sir Edward Belcher, I am inclined to suppose that a belief prevails that the Committee on Ships of War have made this propeller a subject of investigation. That, sir, is a mistake, arising out of an erroneous rumour. That Committee not only never made any report upon this propeller, but they have never even inspected it with a view to making a report. It is true, some individual members of that Committee made a trip in the 'Waterwitch.' They formed individual opinions, no doubt, which I am not acquainted with—I was not one of the party myself—but the Committee, as a body, have never made any experiments upon the vessel, and never made any report. Then, sir, as I have no prac-

Digitized by Google

tical knowledge of this propeller, for I only saw the 'Waterwitch' when she was lying at the quay at Devonport, all I can make any remarks upon is the theory of the subject. There is no doubt that in a theoretical point of view the turbine propeller is capable of approaching nearer to theoretical perfection than any other sort of propeller. The question that remains to be settled is, how far it is easy or possible to realise the conditions that ought to be fulfilled in order that the turbine or jet-propeller may approximate in practice to its proper theoretical performance. That is a question that can only be settled by experience. As to the advantages of being easily placed in safety, and being free from the defects that arise from being alternately lifted out and plunged into the water, those are quite clear. As regards its not losing its efficiency when the orifice of discharge is raised out of the water, I am inclined to go somewhat farther than gentlemen have done. I have heard it stated that it works as well when discharged into the atmosphere as when into the water. For my part, I say it would act best of all in a vacuum; that to be plunged into the water is a disadvantage, though a very small one, and even to discharge into the atmosphere is some slight disadvantage, quite infinitesimal, indeed of no consequence at all in practice, but in a theoretical point of view it is a disadvantage. I remember very well the late Mr Ruthven, the father of the inventor of this form of hydraulic propeller, lecturing upon the subject and demonstrating by experiment that any fluid surrounding the orifice was a disadvantage, because it impeded the issue of the jet from the orifice; and such being the action of a surrounding fluid, of course, if a body of water opposed the issue of the jet and so caused a loss of power, a body of air must do the same thing, and cause a certain loss, though an imperceptible one, and, therefore, the action, no doubt, theoretically would be most efficient in a vacuum."

Captain Colomb, R.N., at the same meeting, made the following remarks:—"I have watched this question with some interest. The very early trials of the turbine propeller, by the Admiralty, came under my personal observation, but as to the further trials that have

Digitized by Google

been made, I have only that general knowledge of them, which everybody, who is interested in the question, has been able to obtain, and no more. . . . . The lecturer adverted to the turning powers not coming quite up to what was expected. I think that the expectation in that case was at fault. There is always a confusion —I have observed it very widely spread—in the estimate of the laws which regulate the turning of ships: a confusion between smallness of space and smallness of time. With a ship of a certain length, it is an axiom that, if you diminish the time in which the ship turns, you will increase the space; if, on the other hand, you diminish the space, you will increase the time. Now, in the case of the turbine, and also of the twin screw, you apply your power so as to neutralise the propulsion, you apply it entirely in turning, you then get a turn in a very small space, but you get a longer time, and the disappointment which has occurred in the case of the turbine, is in the great increase of time in the turning, because you have reduced the space so much. But the great advantage, I take it, of the turbine, in its manœuvring power, is not so much the power it gives you of turning in a very small space, at a necessarily increased time, but it is the power it gives you of applying the whole force of your engines in a moment to stop the ship, or to force her ahead from a state of rest; and as applied to rams, or to avoiding rams, I can conceive nothing more important than that power of immediately stopping or immediately proceeding, which neither the screw nor the paddle gives you to any great degree. I own I have been greatly surprised, that a country like England, with a Navy like that of England, has not put itself sufficiently to the front to thoroughly develope and thoroughly investigate the question, to see whether the turbine is the propeller of the future or is not."

Captain Sharpe, R.N., said—"I can safely say, having commanded the 'Waterwitch' during the time the experiments took place, I always urged (and still think) that they were never carried on to the extent that they might have been. Whilst in command of the 'Waterwitch,' I felt the extreme advantage of having her always

Digitized by Google

under my own individual command. I could stop her, go astern, turn the ship, or do anything, without reference to the engineeers. The only thing I have to add is that during the time I was in the ship, I was very sorry to think that so little use came of it, and that so little has since been done. I will conclude by quoting the words of a distinguished American officer, Admiral Farragut. I took him out one day, and he said—'I have been all over your establishments, military and naval, but the thing that has interested me most, in my visit to this country, is this turbine propeller.'"

Digitized by Google

I.—Trials at the Thames Measured Mile.

Vessel's Name,	Vixen								Viper				Waterwitch			
Nominal horse power,	160								160				160			
Date of trial,	9th May, 1866		18th May, 1866		31st May, 1866		5-6th Nov.,'66		4th June, 1866		5th June, 1866		1st Jan., 1867		17th Jan., 1867	
Draught Fore,	ft. in. 8 7		ft. in. 9 10		ft. in. 9 10		ft. in. 10 5½		ft. in. 9 6		ft. in. 9 6		ft. in. 9 5		ft. in. 10 10	
Draught Aft,	11 8		10 10		10 10		11 5½		10 6		10 6		9 8		11 4	
Midship Section, sq. ft.,	308		315		315		334		309		309		294		342·5	
Boiler power,	Full	Half	Full	Half	Full	Half	Full	Half	Full	Half	Full	Half	Full		Full	Half
Revolutions,	102·75	69·62	114·75	90·37	111·59	90·37	110·3	85·5	110·17	89·75	110	89·12	42·16		41·68	26·53
Indicated horse power,	679	230	766	371	751	386	739	331	690	375	707	378	834·5		828	228
Speed, knots,	8·468	5·667	9·002	7·376	9·216	8·095	8·894	7·242	8·953	7·677	9·168	7·622	9·909		9·255	5·998
$\frac{\text{Speed}^3 \times \text{Midship Section}}{\text{Ind. H P.}}$	275·6	243·6	299·9	340·4	328·5	433	317·7	382·9	321·6	369·1	336·6	361·8	342·7		327·7	324·1

Digitized by Google

II.—Trials at the Stokes Bay Measured Mile.

Vessel's name, -	Vixen		Viper				Waterwitch							
Nominal horse power,	160		160				160							
Date of trial, - -	2nd Aug., 1867		5th Aug., 1867		11th Oct., 1867		9-10th Aug., '67		28th Aug., 1867		3rd Sept., 1867		12th Oct., 1867	
Draught { Fore, -	ft. in. 9 10		ft. in. 9 11		ft. in. 9 11		ft. in. 10 9		ft. in. 10 7½		ft. in. 9 9		ft. in. 10 7	
Draught { Aft, -	11 11		11 10		11 10		11 8		11 1½		11 9		11 2	
Midship Section, sq. ft.,	336		335·7		336		347		336		333		336	
Boiler power, - -	Full	Half	Full	Half	Full	Half	Full	Half	Full	Half	Full	Half	Full	Half
Revolutions, - -	108·6	85·1	109·2	82	110·5	83·7	40·7	26·2	41·5	28·2	40·9	27·9	40·4	30·6
Indicated horse power,	657	336	652	334	696	344	777	226	801	271	769	268	759	348·5
Speed, knots, - -	9·06	7·347	9·475	7·334	9·586	7·625	9·237	6·227	9·219	6·047	8·88	6·326	9·299	7·206
$\frac{\text{Speed}^3 \times \text{Midship Section}}{\text{Ind. H.P.}}$	379·9	395	438·5	396·5	435·4	431·3	351·9	369·6	328·7	273·9	303·3	314·3	357·8	359·6

Digitized by Google

III.—Trials of "Philomel' Class.

Vessel's name, -	Philomel				Lapwing						Ringdove						Bullfinch			
Nomi. horse power,	160				160						160						160			
Date of trial, -	Mar. 14, '68		May 8, '68		Mar. 20, '68		Apr. 16, '68		July 14, '68		Mar. 20, '68		Mar. 30, '68		Nov. 19, '68		May 12, '68		Oct. 27, '68	
Draught { Fore,	ft. in. 9 4		ft. in. 9 8		ft. in. 8 4		ft. in. 8 10		ft. in. 9 5		ft. in. 8 6		ft. in. 8 8		ft. in. 9 7		ft. in. 8 10		ft. in. 9 3	
Aft,	10 5½		10 3		10 4		10 2		10 4		9 10		10 2½		10 3		10 2		10 3	
Mid. Sec., sq. feet,	229		230		212		217		228		207		216		229		217		224	
Boiler power, -	Full	Half	Full	Half	Full	Half	Full	Half	Full	Half	Full	Half	Full	Half	Full	Half	Full	Half	Full	Half
Revolutions, -	118·08	91·5	119·33	97·35	115·97	86·96	124·42	95·468	119·96	89·53	125·18	83·825	123·83	98·415	120·61	95·986	131·91	98·5	129·08	95
Ind. horse power,	968	452	961	489	809	324	1004	398	882	339	889	282	945	463	957	441	917	378	985	338
Speed, knots, -	10·86	9·391	10·982	9·359	10·464	8·051	10·839	9·088	10·847	8·718	10·632	8·145	11·103	9·581	10·722	9·383	10·959	8·892	10·624	8·581
$\frac{\text{Speed}^3 \times \text{Mid. Sec.}}{\text{Ind. H.P.}}$	302	419	31	385	299	340	274	407	329	445	279	393	311	410	294	426	311	403	272	418

Digitized by Google

Mr MOLLISON, on being called upon, said he didn't think he could say very much upon the paper. The Admiralty seem to have abandoned the experiments with this propeller as fitted on the "Waterwitch" at a very early stage, and if anything had been likely to come out of it they might have continued these experiments. The only instance of a vessel being fitted on the Clyde with a propeller of this description was in the first ferry-boat that was put on the Clyde Street ferry, but he did not think it proved successful. He also thought that a trial was made with it in a boat on the Glasgow and Paisley canal. Of course great improvements have been made in boiler work and engine construction during the last twenty years; and, if Mr Ruthven can prevail upon the Admiralty to resume experiments with his propeller, there is no doubt he will get more efficient engines, and also boilers, to carry out these experiments. He thought this form of propulsion rather antiquated now for any engineer and shipbuilder or shipowner to take the matter up and experiment with it.

Mr EBENEZER KEMP said Mr Ruthven seemed to be of opinion that the Admiralty did not pursue the subject as far as they might have done, considering the great importance of the subject. There was little probability, however, that the jet would beat the screw propeller, as it is commonly called. He considered the screw propeller the most direct propeller we knew of. It is a very simple machine as far as its direct contact with the engines is concerned. A crank shaft simply revolves and has a propeller on the tail end of it; it is a pump working in a water chamber and with the least friction it could possibly have. When there is a turbine inside of a vessel, and drawing water from the outside, and giving it a twist or two and putting it out again, there must be more friction. He would not have a turbine in any form whatever to take the water in at right angles and give it a twist or two and put it out again. He thought it was mentioned in the paper that Professor Rankine had made some remarks about the jet propeller being as efficient above as below water, and said it would be more efficient if discharged into a vacuum. He thought it would be a useful thing to have

Digitized by Google

details of any experiments made in this direction added to the paper and embodied in the Transactions.

The PRESIDENT trusted that after the paper was in the hands of the members there would be a good many shipbuilders present at the next meeting prepared to discuss the subject and give their views upon it.

There being no further discussion on this paper, at meeting of 22nd December,

The PRESIDENT said they were very much indebted to Mr Ruthven for bringing the subject before them, and moved a vote of thanks. The vote was heartily accorded.

Note received from Mr Ruthven, 30th October, 1891.

The diagram shows the results of trials. On the base line is laid off the speeds of the different trials, and vertically the values from the formula $\frac{S^3 \times M.S.}{I.H.P.}$

The scale on the left hand is for measuring these values.

The diagram is made from the Tables I. and II.

The results of the action of the jet *in* and *out* of water are given in the tables of trials. The trial where the area of midship section is smallest is the one when the jets were out of water; and the trial where the midship section is greatest is the one when the jets were submerged.

The co-efficients of these trials show that they are practically equally good.

Digitized by Google

Mr RUTHVEN in reply stated,—It gave him great satisfaction to find that no flaw had been found in his reasoning and deductions from the official trials of the jet propeller, so that it may now be considered proved that the jet propeller is greatly superior to the screw in economy and in many other valuable qualities, such as stopping quickly, manœuvring and steering under all circumstances, thereby giving every facility to avoid collisions. The enormous pumping power of the jet propeller renders it almost impossible to sink the ship from leakage, and the great command of water keeps the ship perfectly safe from fire, as any part of the ship may be deluged by water, and the water discharged again, while the ship continues on her voyage.

By means of the jet propeller, any size of ship may be driven at as high a rate of speed as the ship can carry power for; and as he had proved it to be more economical than the screw, it follows that with the jet propeller a higher speed can be obtained than is possible with a screw-propelled ship.

He was obliged to Mr Mollison and Mr Kemp for their remarks; the fact that so many trials had been made with the jet went to prove that the convictions of its value are widely spread, and these are supported by Professor Rankine and others.

What he had laid before the Institution is not opinions, but facts and deductions from them.

The jet propeller has such enormous advantages, many of which have never been disputed, that the adoption of it will be of immense value to the country.

Digitized by Google

On Brown's New Rotary Expansive Steam Engine.

By Professor JAMIESON, M. Inst. C. E., F. R. S. E., &c.,

The Glasgow and West of Scotland Technical College.

(SEE PLATE II.)

Received and Read November 24th, 1891.

BRIEF HISTORY OF ROTARY ENGINES.

THE very first invention (of which we have any record) connected with the production of motion by the aid of steam, was in the form of a rotary engine. In a work entitled *Spiritalia Seu Pneumatica*, written by Hero, a philosopher of Alexandria, in Egypt, about the year 130 B.C., a rotary steam engine called the "Æolopile" is clearly described.*

Ever since steam engines became useful machines, the rotary form has exercised a wonderful fascination over persons of an inventive turn of mind. Many persons have tried their skill at producing them, with the view of superseding or at least successfully competing with the ordinary form of reciprocating piston engine. This fascination was at one time no doubt partly due to a prevalent belief, that the reciprocating motion of the piston, combined with the motions of the connecting rod and crank, involved a considerable loss of power in transmitting the motion of the piston to the crank shaft. Quite independent, however, of this mistaken idea,

* For a description, with figure, of Hero's engine, see "Steam and the Steam Engine," by the author, page 2, published by Messrs Charles Griffin & Co., London.

Digitized by Google

the apparent simplicity of deriving rotatory motion *direct* from a rotating cylinder or piston has encouraged inventors to devise many kinds of rotary engines. The difficulty of putting their ideas into practical shape, and of keeping the internal moving parts steam tight, as well as of taking full advantage of the expansive property of steam, has produced a general belief that patentees of rotary engines should be classed with those, who imagined that they had discovered "perpetual motion" or the "philosopher's stone."

The various types of rotary engines hitherto produced have been classified under the following headings*—1, Reaction engines; 2, Impact engines; 3, Liquid pressure engines; 4, Disc engines; and 5, Revolving piston engines.

The Æolopile described by Hero, of Alexandria, with such modifications as "Barker's mill," the "revolving gas jet," and the fireworks "star wheel," come under the first class, since their rotatory motion is derived from the reaction of the atmosphere against the force of an issuing fluid. The efficiency of these instruments is so very small, that little further use is made of them, than in the form of models for the amusement of children, and as aids in the demonstration of natural philosophy problems on the principle of reaction.

Engines of the second class, such as Branca's, Pilbrow's, Cordis & Schiel's turbines receive their motion from the impact of steam either directly at right angles upon, or obliquely against revolving vanes. The Honourable Mr Parsons' well-known steam turbine (of which a specimen was at work in the late Glasgow International Exhibition) belongs to this class.† Many of his engines are at present employed for driving the electric lighting dynamos on board steamers, and four large ones, of over 100 horse power each, have been used for the past two years at the Newcastle and District Electric Lighting Company's Central Station. The high speed at which these steam turbines work (sometimes up to 10,000 revolutions per minute, in the case of small ones) enables them to be

* See "A Treatise on the Steam Engine," by Mr John Bourne, published by Messrs Longmans, Green, Longmans & Roberts, London.

† See Proceedings of Institution of Mechanical Engineers, 1888, page 480.

Digitized by Google

coupled direct to dynamos, and the combination thus occupies a minimum of space and of weight for the power developed. We have yet to learn, however, that their consumption of steam per B.H.P. hour is such that they can successfully compete on open terms with the best reciprocating piston engines, when space and weight are not of vital importance.

Of the third, or liquid pressure type of rotary engine, many varieties have been tried, but none of them have been successful. Watt in his early career constructed an engine of this kind, in which steam acted against the weight of a column of fusible metal, but when the engine was stopped, the fusible metal, in the act of cooling, expanded (like water in freezing) and burst his cylinder. Neither mercury nor fusible metals have as yet been found suitable liquids in practice for obtaining motion from their combination with steam.

Disc engines (of which Bishop's and Davies' are the best known forms*) consist of a disc moving in part of a hollow spherical vessel, with a central outstanding arm attached to a disc or crank. No apparent economy has been observed with this form of engine over the simpler reciprocating piston, and the great difficulty experienced in keeping the internal parts steam tight led to their abandonment. They are mere frolics of mechanical ingenuity.

The most popular type of rotary engine in this part of the country has undoubtedly been that of the revolving piston. James Watt, Murdoch, Lord Cochrane (the Earl of Dundonald), David Napier and John Yule, both of Glasgow, devised revolving piston engines; whilst Brown, of the Rosebank Iron Works, Edinburgh, experimented a few years ago with revolving cylinders,† and Ross, jun., of Messrs Glen & Ross, is now at work on a revolving piston engine.

---

* See Bourne on the "The Steam Engine," Plate XXV., pages 315 and 393; also, Reuleaux' Kinematics of Machinery, translated by Prof. A. B. W. Kennedy, Plates XXVIII. to XXXI., pages 386, &c. In this book will be found most of the suggested forms of rotary engines.

† Mr Brown is the inventor of the well known hydraulic starting gear for marine engines.

Digitized by Google

The Earl of Dundonald was undoubtedly the most successful of the early projectors of this kind of engine, and had he been able to procure sufficiently accurate fitting mechanism, he would not in all probability have had to give up this pet project of his, at which he had worked so long and so hard. Within the last ten years or so an engine of this class, termed the "Tower Spherical Engine," has been extensively applied to the driving of dynamos and other fast speed machinery without the intervention of gearing.* In fact, the "Tower" and "Parsons" engines have of late held the field against all similar rivals. A great opportunity still exists, however, for the employment of a really economical rotary, which shall at the same time combine the other very necessary qualifications of neatness, small bulk, lightness, strength, durability, uniformity of speed under widely different loads and pressures, perfect balancing in all the moving parts, with freedom from noise and vibration.

HISTORY OF BROWN'S ROTARY ENGINE.

Fully four years ago Mr A. F. G. Brown (of Swindridgemuir, Dalry, Ayrshire), with the object of producing such a perfect rotary engine as I have just indicated, took as his prototype what he considered would most likely fulfil his object, viz., the revolving piston devised by James Watt and improved upon by the Earl of Dundonald. With this design as a basis he felt convinced that by the aid of the superior machine tools and workmanship now obtainable, and by making certain reforms in the mechanical details, he should meet with success. After constructing with his own tools and hands the working model which you now see placed before you on the lecture table,† he sought the aid of Messrs John Lang &

* For a description of the "Tower Spherical Engine," by R. Hammersley Heenan, see Proceedings of The Institution of Mechanical Engineers, 1885. For a drawing of the Tower engine coupled direct to an Edison Hopkinson Dynamo, see Proceedings of The Inst. of C.E., Vol. LXXIX., Session 1884-85, Paper on Electric Lighting of Steamships, by the Author.

† The dimensions of the cylinder of this model are 4¼ inches diameter by 2½ inches broad. It gave 2½ B.H.P. at 930 revolutions per minute, with steam of 40 lbs. initial pressure.

Digitized by Google

Sons, of Johnstone (whose skill in the manufacture of lathes and of shaping machines is well known to most mechanical engineers at home and abroad). The several engines made by Messrs Lang & Sons were subjected to long continuous severe runs at full power under a brake load. Every detail which showed signs of weakness was redesigned and reconstructed. During the last twelve months I have had frequent opportunities of testing Mr Brown's engines with a view to verifying his results and of suggesting wherein they might be still further improved, and thus I am able from personal observation to state that during this period the consumpt of steam has been reduced by over 25 per cent., and that the durability and adaptability of the engine have been considerably enhanced.

As Messrs John Lang & Sons are not engine makers to trade, Mr Brown has now placed the manufacture of his engines in the hands of Messrs Matthew Paul & Co., of Dumbarton, who are well known builders of fast speed electric light engines to the Admiralty, &c., so that should there be anything good and worthy in the design, its construction will receive the best skill and attention of experienced engineers. Messrs Paul & Co. have already helped Mr Brown to simplify and adjust certain details which it is hoped will still further reduce the consumpt of steam and increase its durability.

DETAILED DESCRIPTION OF BROWN'S NEW DOUBLE DOOR ENGINE.

Outside Views (see Plate II., Figs. 1 and 2).—From an inspection of the end and side views and their corresponding "index to parts," it will be gathered that the engine consists of a cylinder encased in steam and exhaust jackets, having strong end covers terminating in long bearings supporting the central shaft, to which are keyed a flywheel at each end. The eccentric valve gear, which works the rotating valve spindles, is shown on the end view.

Sectional Views (see Figs. 3 and 4, p. 38).—From the accompanying sectional elevation and plans, with their "index to parts," the internal arrangement of the engine will be readily understood. Steam from a boiler enters through a stop valve and the steam

Digitized by Google

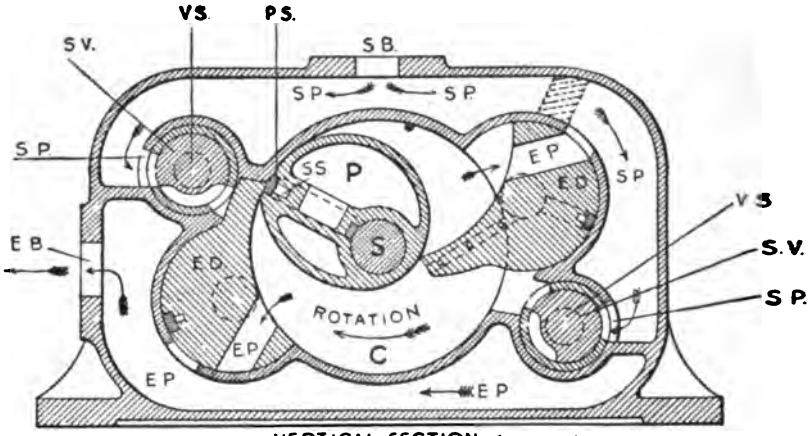

VERTICAL SECTION *(FIG 3)*

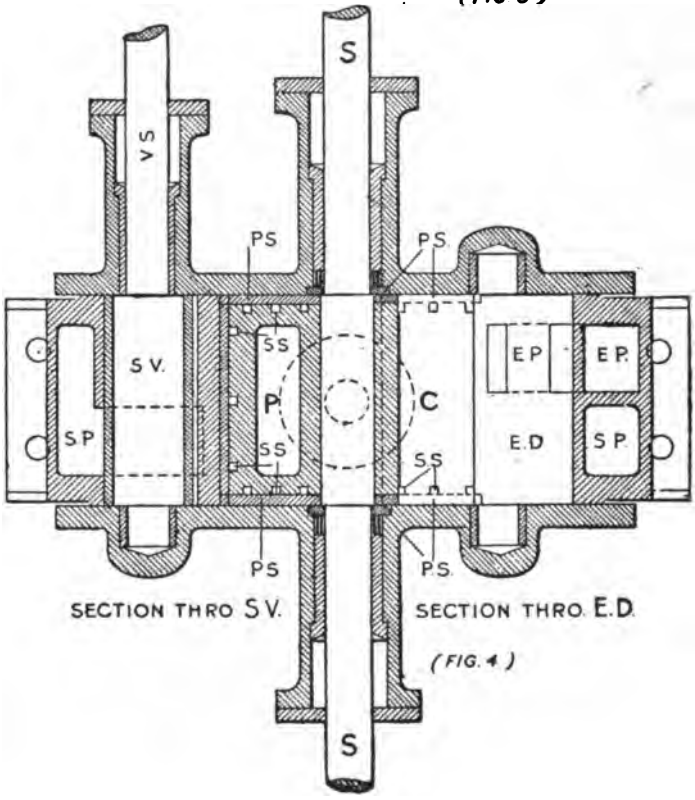

SECTION THRO S.V. SECTION THRO. E.D.

(FIG. 4)

Digitized by Google

INDEX TO PARTS.

SB	represents	Steam branch from boiler.
SP	,,	Steam ports and passage.
SV	,,	Steam valves.
VS	,,	Valve spindles.
C	,,	Cylinder.
P	,,	Piston.
PS	,,	Packing strips.
SS	,,	Spiral springs.
S	,,	Shaft.
ED	,,	Exhaust doors.
EP	,,	Exhaust ports and passages.
EB	,,	Exhaust branch.

Digitized by Google

branch SB into the steam passage, SP,* and through the steam port in the *left* hand revolving steam valve, SV, into the cylinder, whenever the piston, P, has passed the nose of the *left* hand oscillating exhaust door, ED. The piston is thereby forced round under full steam pressure until it reaches the point of "cut off," when the *left* hand rotating valve closes the steam port. For the remainder of the stroke, the piston is propelled by the natural expansive force of the steam (enclosed between it and this steam valve) until release takes place through the exhaust port, EP, in the boss of the *right* hand exhaust door, ED; from whence, the steam passes along the exhaust passage, EP, and through the exhaust branch, EB, to the atmosphere or to a condenser according as the engine is working as a non-condensing or condensing one. Precisely the same action takes place during the remaining half of the piston's revolution by aid of the *right* hand steam valve and the *left* hand exhaust door.

Nothing could be simpler under the circumstances, or more effective; for full advantage is taken of the expansive properties of steam by so arranging the "lead" of the eccentric (which turns the steam valves) that the "cut off" may take place at any desired proportion of the piston's stroke; or, the "cut off" may be directly varied according to the load and steam pressure by connecting a loose eccentric to the governor.

It will be observed, that the front edges and surfaces of the exhaust doors make a steam tight fit with the circumferential surface of the piston, and that when these doors are closed they form part of the bore of the cylinder. They are forced forward by the incoming steam pressing behind them, whenever the peculiarly shaped piston has passed them, and they are pushed *gently* back

* This steam passage thus forms a steam jacket to half the cylinder. It may be arranged so as to form also a "water trap" (with a return "loop" to the boiler), so that nothing but dry steam shall enter the cylinder. The underneath side of the cylinder is steam jacketed by the exhaust steam. The outside of both cylinder covers and jackets are carefully lagged with felt, and covered with wood to prevent radiation.

Digitized by Google

into their seats by the piston (during expansion and release) against the reaction of the pent up or "cushioning" steam retained between them and the steam valves.

The working surfaces of the piston, steam valves, and exhaust doors, are all packed by gun metal strips, kept up to their bearings by small adjusted spiral springs. From the perspective view of the piston (in Plate II., Fig. 5), it will be seen that the side and end packing strips are checked into each other, as well as the side strips into the ring ones next the shaft. In order to make the wear uniform on the side packing strips, the spiral springs are made proportionately shorter, the further they are from the centre of the shaft, and since each of these springs are contained in the same length of hole, their outward pressure on their strip is inversely proportional to their radial distance from the centre of the shaft; or, in other words, inversely to their travel.

BROWN'S SINGLE DOOR ENGINE.

From the description which we have just given of the double door engine, the construction and action of the single door one will be easily understood from Figs. 6 and 7. This form of engine has not been steam jacketed, as it is intended for rougher and smaller work than the double door one, such as driving fans, &c.

TESTS OF BROWN'S ENGINE.

The last tests which I made of this engine were taken on the 27th May and 4th June of this year, at Messrs John Lang & Sons, Tool Works, Johnstone.*

The general arrangement of the engine and the brake gear used by me are shown by Fig. 8, which has been reproduced from a freehand sketch, made by Mr J. H. Oswald Brown, artist, on

* It was hoped that one of the latest and most improved engines now being made by Messrs Matthew Paul & Co., Dumbarton, would have been ready in time for testing before the date of this meeting; but as this has been found impossible, I shall have pleasure in adding an appendix to this paper of the results.

Digitized by Google

4th June, just prior to my taking the second set of indicator diagrams.*

PRELIMINARY INSPECTION AND VERIFICATION OF APPARATUS.

I carefully measured the volume of the boiler water supply tank, and found it to be 305 lbs. for the barrel when full to the overflow hole; I checked the brake spring balances by *Government stamped standard* weights; saw that the brake ropes were properly adjusted; and found the *radius* of the brake load (r) to be 2·0417 feet.†

TRIAL RUN, PERIODICAL OBSERVATIONS.

With steam shut off from the engine, the feedwater was forced into the *locomotive multitubular boiler by the injector, until it reached a*

---

* It will be observed from a comparison of this figure with those already described, that several improvements have been effected in the design.

1. The cylinder has been thoroughly encased by steam and exhaust jackets, thus doing away with the branch steam pipes and minimising the initial condensation of steam.
2. The valve wheel gearing has been replaced by eccentric gear, thus lessening the noise and increasing the durability.
3. The exhaust door spindles have been encased by the cylinder covers.
4. The bosses of the exhaust doors have been considerably enlarged, whereby a larger and consequently much easier passage for the exhaust steam has been afforded. (This improvement was shown to be necessary by an inspection of the indicator diagrams.)
5. The length of the exhaust doors has been considerably shortened, thus lessening the retarding friction between them and the revolving piston.
6. The whole engine now rests on one base plate, instead of being distributed over three points of support.
7. The outstanding bearings have been removed, thus greatly shortening the length of the engine as a whole.
8. Two fly wheels have been fitted instead of one, thus enabling the engine to be more perfectly balanced.

† Hence, log. of constant for B.H.P. $\left(\text{or log } \frac{2\pi r}{33000}\right) = \bar{4}.5895$

log. of mean brake pull, 93·2 lbs. $= 1·9694$

log. of mean speed, 574·5 $= 2·7593$

log. of mean B.H.P., 20·8 $= 1·3182$

Digitized by Google

definite mark (about half glass) on the polished brass scale, fixed immediately behind the gauge glass. The water supply tank was then filled up to the overflow hole, and the steam pressure raised to 93 lbs. by steam gauge. The engine was started at 2.15 P.M., at a speed of 560 revolutions per minute, and then simultaneous observations were taken every 15 minutes of the boiler pressure, nett brake load, and the revolutions per minute by Messrs Schäffer & Budenberg's Tachometer,* from which the brake horse-powers have been calculated. The whole of my observations have been inserted in the accompanying table exactly as they were written down at the time, and the means are taken from the *continuous run* extending over *five hours*.

---

* The accuracy of this instrument I had previously ascertained by trial with a speed counter. The instrument used was shown at the Lecture on November 24th, 1891.

Digitized by Google

Dimensions of Cylinder and Piston.—Diameter of cylinder = 10·5 inches; length of cylinder = 8·625 inches; volume of cylinder = 746·9 cubic inches. Cross area of piston = 40·5 sq. in.; length of piston = 8·625 inches; volume of piston = 349·3 cubic inches—or nearly equal to half the volume of the cylinder.

Brake Horse Power Tests of Brown's Rotary Engine.

No. of Reading.	May 27th, 1891. Times. P M.	Boiler Pressure by Gauge. lbs.	Nett Brake Load. lbs.	Revolutions per Minute.	B.H.P.	Remarks.
1	2 30	93	90	560	19·58	Each barrel full of feedwater = 305 lbs.
2	2 45	90	84	570	18·61	2-50 p.m., 1st barrel into boiler.
3	3 0	93	87	580	19·61	
4	3 15	93	88	580	19·84	
5	3 30	93	92	580	20·73	3-25 p.m., 2nd barrel into boiler.
6	3 45	93	92	560	20·02	3-45 p.m., 3rd " "
7	4 0	93	92	550	19·66	
8	4 15	93	90	570	19·04	4-10 p.m., 4th " "
9	4 30		92	570	20·38	
10	4 45	98	97	570	21·49	4-35 p.m., 5th " "
11	5 0	93	93	570	20·60	
12	5 15	96	96	580	21·64	5-5 p.m., 6th " "
13	5 30	96	96	580	21·64	Engine very steady. Brake working splendidly.
14	5 45	98	98	580	22·09	5-25 p.m., 7th barrel into boiler.
15	6 0	100	96	600	22·39	5-45 p.m., 8th " "
16	6 15	97	99	560	21·54	6-10 p.m., 9th " "
17	6 30	93	94	570	20·82	6-30 p.m., 10th " "
18	6 45	93	93	600	21·69	
19	7 0	99	102	570	22·08	6-55 p.m., 11th " "
20	7 15	98	93	590	21·32	7-20 p.m., 12th " "
						7-40 p.m., 13th " " less 16½ lbs.
	Means =	95	93·2	574·5	20·784	Total Feedwater used in 5 hours = 3948·5 lbs.
						Gross Feedwater per hour = 789·7 "
						" " per B.H.P. hour = 37·9 "
						" " per I.H.P. hour = 31·47 "

Digitized by Google

From this table it will be seen how very steadily the engine maintained its speed, and how the power developed by it gradually rose from a minimum of 18·6 B.H.P. to a maximum of 22·39 B.H.P., as the working parts warmed up.* A considerable condensation of steam no doubt took place in the steam pipe, and in the two long indicator pipes, which were not lagged. The fall of pressure between the boiler and the cylinder, as shown by a comparison of the pressure gauge, and the indicator cards, amounting to fully 15 lbs. on the square inch, is due to the steam pipe being small, right angle bends, and the non-effective water trap. From the indicator cards taken by me prior to commencing the brake horse-power trial of 5 hours, as well as from those taken by me subsequently on the 4th June, the indicated horse-power was 25·1.†

The indicator diagrams were taken with M'Innes' fast speed indicator, and they are remarkably good. They show an almost equally effective power developed by the steam admitted through each rotating valve and cylinder door. The mechanical efficiency of the engine and combined heavy brake wheel and gear, or ratio of brake horse-power to indicated horse-power was 82·8 per cent.‡

After steam *was shut off* from the engine at 7.15 P.M. feedwater

---

* Had I been certain that the brake wheel (which was 4 feet in diameter with light arms) could have withstood a higher speed than 600 revolutions per minute, there would have been no difficulty, so far as the engine itself was concerned, in increasing the speed to 800 or even 1000 revolutions per minute; as both the material and workmanship seemed to be of excellent quality, and the only oscillating parts were the valve doors, which were duly cushioned during their back strokes, and always kept bearing upon the rotating piston by steam acting from behind them. Had this higher speed been attempted, there can be no doubt that the consumption of steam per B.H.P. hour would have been still less than it was, viz., *a mean of* 37·9 lbs. per B.H.P. hour.

† It was found impossible to get steady cards at the high speeds maintained during the brake horse power trials, owing to vibration and jerking, so I had to be reluctantly content with cards taken at 200 revolutions per minute.

‡ Or, $\frac{\text{B.H.P.}}{\text{I.H.P.}} = \frac{20{\cdot}784}{25{\cdot}1} = 82{\cdot}8$ per cent.

Digitized by Google

was injected into the boiler until it reached the *same mark* on the gauge glass scale with which we started the trial run, and the feed-water barrel was filled up to the overflow hole. From these data, I found that the engine had used a total of 3948·5 lbs. of water during the 5 hours, or 789·7 lbs. of water per hour, which is equivalent to 37·9 lbs. per B.H.P. hour and 31·47 lbs. per I.H.P. hour.*

CONDITION OF ENGINE AFTER THE BRAKE HORSE-POWER TRIAL.

I had the right hand cylinder cover removed after the five hours' run, and found all the working surfaces in perfect order. Not only were the original tool marks everywhere visible, but a fine hard glossy skin was coming up on all the wearing parts.

DESCRIPTION OF BRAKE USED DURING THE TESTS.

(See Fig. 8, Plate II.)

From the general view of the engine, it will be seen that I employed the rope brake, but substituted the lower Salter's balance spring for the dead weight hitherto used by engineers.† This form of brake deserves to be better known than it seems to be; for with it no lubrication whatever is required, and continuous runs of any desired length of time may be carried out without any fear from overheating or requiring to stop for adjustment. It simply consists of an endless rope passed round the fly-wheel or brake pulley, with combined wooden distance pieces and guards so as to keep it evenly adjusted, and two Salter's spring balances. To find the nett brake

* Since these tests were taken by me the engine has been so improved that Mr Brown obtained (with steam of initial pressure of 89 lbs. per square inch and 600 revolutions per minute) 24·25 B.H.P. on a consumption of 33 lbs. of steam per B.H.P. hour. This would give with 82 per cent. mechanical efficiency (assumed from former results) 27 lbs. of steam per I.H.P.-hour.

† I first introduced this modification of the rope brake on March 29th, 1889, when testing the Ajax Gas Engine, and it effectually minimises the hunting action of the brake, enabling the observations to be taken with greater certainty. It also prevents the danger (which was inherent in the former method) of the lower weight being carried round by the fly should the ropes grip the same at any time. See 6th Edition Steam and Steam Engines, by Chas. Griffin & Co.

Digitized by Google

load, you have simply to add the weight of the hanging part of the lower balance to its own nett reading, and subtract from this sum the back pull as registered by the nett reading of the upper balance.

DESCRIPTION OF THE INDICATOR DIAGRAMS. (See Fig. 12, Plate II.)

Since this was the first time that I had attempted to take indicator diagrams of a rotary engine, and never having heard of such having been taken before, I was slightly puzzled as to how best to obtain the motion for the indicator drum so that it might move synchronously with that of the revolving piston. At last, an eccentric was keyed (see Fig. 9) to the valve gear end of the central shaft so that the free end of the lever (which was attached by a cord to the indicator drum) was at its highest point when steam was being admitted to one side of the cylinder, and at its lowest point when steam was being admitted to the other side. As the free end of this lever descended, it pulled round the indicator drum in the proper direction. The indicator pipes were attached to the cylinder cover at points just beyond the noses of the exhaust valve doors, in order that the indicator might truthfully register the variation of pressure from beginning to end of the strokes. I then took a number of preliminary diagrams, until I got uniform diagrams from each half of the piston's revolution. Since taking these diagrams it has been pointed out to me that although the centre line of the eccentric and the centre line of the piston kept time, the indicator cord was moved in a straight line whilst the piston and eccentric were moving in a circle. Consequently, I have had to get the original diagram correspondingly corrected. This has been kindly done for me most carefully by Mr Paul, jun. The length of an original diagram, taken on June 4th, has been considered as the diameter of a circle, and from the ten points of division, ordinates have been drawn (as shown by Fig. 10, Plate II.). The length of the semicircle and the intersection of ordinates therewith are evidently the true points of observation for the various pressures. The corrected diagram corresponds with

Digitized by Google

the points of cut off of the engine, as carefully observed by aid of the exact wooden sectional model now before you.

Further, the mean effective piston area and effective stroke of this engine are not easily ascertained; for the effective area on which the steam acts, as well as the effective moment of the force derived therefrom, are continually changing throughout the stroke or revolution of the piston. What I have done, therefore, in order to ascertain the indicated horse power, is this. I have found the effective area of the piston on which the steam presses at each of the ten points at which the pressures are marked on the indicator diagram, and thus calculated the work done for each tenth of half a revolution. (See Fig. 11.) The sum of these 10 values gives the work throughout one stroke, to which was added the work done by the steam on one exhaust door. This sum, multiplied by the number of strokes per minute, and divided by 33,000, gave the indicated horse power as 25·1, as a near approximation to the true value.

I may, however, remark that improvements in the distribution of the steam, the points of "cut off" release, back pressure, negative work, and compression, can only be studied by carefully taking and reading the true indicator diagrams of this engine. In order to obtain more exact diagrams in future, Mr Paul, jun., has proposed winding a long sheet of indicator paper on the central shaft acted on directly by the indicator pencil. I would, however, suggest the driving of a wooden drum at exactly the same rate as the shaft, in the manner indicated by Fig. 13. On this drum would be wound a continuous length of indicator paper, to be acted on directly by the indicator pencil, so as to obtain a perfectly continuous and synchronous representation of the variation of pressures taking place within the cylinder during each half of a revolution in the case of the double door engine, and of course during a complete revolution in the case of the single door one.

FINAL REMARKS.

I may sum up this paper by giving the points claimed by Mr

Digitized by Google

Brown for his engine over those of preceding inventions of rotary engines :—

(1) Packing strips that are expected to wear uniformly and last a long time without requiring adjustment or renewal.

(2) Early cut off with corresponding economy, due to taking full advantage of the natural expansive property of steam.

(3) A minimum of clearance space.

(4) Jacketing.

(5) A thoroughly well balanced strong engine, occupying a minimum of space for the power developed, freedom from undue vibration and noise, combined with high speed and an economy of steam that has not been reached by any other rotary engine or even by any simple reciprocating engine of the non-condensing and non-compound type.

(6) The possibility of compounding his engine, or even of adopting triple or further multiple expansion, and of using the highest practicable pressures.

It was agreed to postpone the discussion of this paper to next General Meeting.

The discussion on this paper took place on 22nd December, 1891.

Mr Brown (on being called upon) said he really did not know what to say, unless some one found fault with the engine, because Professor Jamieson's paper at last meeting seemed to him a very full one. He had experimented further with the engine, and found that by shortening the doors better results had been obtained, raising the output of the engine from 20 brake horse power to 26 brake horse power; the consumption of water being reduced from 37 to 33 lbs. of water per brake horse-power-hour. There are points which have always been points of discussion about rotary engines, and he should very much like if these points were attacked. There is one thing which Professor Jamieson omitted in his paper. He

Digitized by Google

mentioned that Messrs Lang had done all that they could for the improvement of his engine, and he must say that he owed a great deal of thanks to Messrs Miller & Co., Coatbridge, and particularly to Mr Finlayson of that company, for the assistance they had given.

The Secretary read the following remarks by Professor Barr :—

Professor BARR said this paper dealt in the first place with the design of Mr Brown's engine, and in the second place with indicator and brake tests of that engine carried out by Professor Jamieson. He wished to refer especially to the questions raised by the latter part of the paper. The great difficulty in designing rotary engines of the revolving piston type, is to secure continued steam-tightness of the working parts, and whether or not Mr Brown's engine will prove any exception to its predecessors in respect to this matter, will only be shown by continued trial. Kinematically the engine is ingenious and interesting, but he presumed that it had not yet had a sufficiently long trial to prove its durability. With regard to the earlier part of the paper, Prof. Jamieson makes the somewhat common error of attributing the motion of "Hero's engine" and "Barker's mill" to "the reaction of the atmosphere against the force of an issuing fluid." The atmosphere has nothing to do with the action except to retard it. The driving force is due to the reaction of the fluid upon the wheel, a reaction which would be manifested more strongly in a vacuum than in the atmosphere, inasmuch as the atmosphere, by its pressure, retards the flow of the fluid. At the top of page 45, the increase of brake horse power is attributed to the warming up of the parts of the engine. Was this increase not due simply to the increase of the boiler pressure? The B.H.P. seems fairly well to follow the fluctuations of the boiler pressure. Brake trials of steam engines and other motors are carried out much too seldom, especially in Scotland. If makers would carry out exhaustive trials of their engines when any important changes in design are made, they would gain much very valuable information which could not fail to lead to important improvements being made. However, for such tests to be of any value, they must be carried out with every precaution to secure accuracy; otherwise they can only be

Digitized by Google

misleading and worse than useless. On pages 44 and 45 the indicated horse power is referred to and compared with the brake horse power. Professor Jamieson explains in a foot-note, that whereas the brake horse power trials were made at 575 revolutions per minute, the indicator diagrams were taken at 200 revolutions per minute, and the speed assumed to be 575 revolutions in calculating the indicated horse power. He need hardly point out that any conclusions founded upon figures so determined must be entirely misleading. If—to mention no other effect—the fall of pressure between the boiler and the cylinder was fully 15 lbs. per square inch at 200 revolutions, what may it not have been at 570 to 600 revolutions? If diagrams could not be taken—not only with the engine running at the same speed as that at which it ran during the brake trials—but at frequent intervals actually *during* the brake trials, no indicated horse power should be stated at all in connection with the brake horse power, much less should the mechanical efficiency be set down to one part in 800, and the consumption of steam per I.H.P. to one part in 3000. In the description of the brake used, the author refers to the substitution of a spring balance for the "dead weight hitherto used by engineers." The facts are rather the other way. A spring balance was often used long ago, but the dead weight is very much to be preferred, and is now used in preference to the spring balance in the best practice. The use of the spring balance at the tight side of the rope introduces a variable force in place of the constant one given by the weight, and necessitates two readings being taken in place of one. So far as he was aware, it was Sir William Thomson who first advocated the use of a simple rope brake with dead weight and spring balance, and he might be permitted to say that the details of the brake shown in Fig. 8, Plate II. (with the exception of the lower spring balance), appear to have been taken from one designed by himself and figured in the "Proceedings of the Institution of Civil Engineers," Vol. LXXXVIII. It is obvious that the fear of overheating referred to on page 46 has nothing whatever to do with the question of springs or dead weights. The heat generated depends only on the work absorbed,

Digitized by Google

and not at all on whether it be a spring balance or a dead weight that pulls the rope. On examining the indicator diagram published in the paper, he was at a loss to reconcile it with the description of the gear given on page 47, and the sketch (Fig. 9, Plate II.). He therefore wrote to Professor Jamieson, who kindly replied, confirming the view formed, and correcting the description given on page 47. The centre line of the eccentric, it appears, was not fixed in line with the centre line of the piston, but "so that the free end of the lever (which was attached by a cord to the indicator drum) was at its highest point when steam was being admitted to one side of the cylinder, and at its lowest point when steam was being admitted to the other side." The eccentric was turned round until by trials the desired position was found. This also explains what was rather an obscure sentence on page 47, where the author states that he took a number of preliminary diagrams, until he got uniform diagrams from each half of the piston's revolution. Professor Jamieson explains the method adopted for "reducing" the diagrams, and for finding from them the indicated power. This method of reduction is considerably in error, inasmuch as the eccentric rod is very short and vibrates on one side only of a perpendicular to the lever in its central position, whereas it has been assumed that the eccentric rod is infinitely long. Even, however, supposing that this reduction had been correctly made, the diagram would still have been quite misleading. It will be seen that the diagrams given—both the original one and the reduced one—suggest an impossible curve of expansion, and an impossible negative loop (unless indeed there was a far too late release and a very great leak of steam past the piston). The method indicated on pages 47 and 48 of determining the indicated power by finding what the author calls "the effective area on which the steam acts," and "the effective moment of the force derived therefrom," is exceedingly cumbersome and almost impossible of being carried out with any approach to accuracy. He need hardly point out that the work done upon the piston in an ordinary cylinder, by a constant pressure which may be expressed by the total force acting on the piston multiplied by the

Digitized by Google

distance through which the piston moves, may be equally well expressed by the pressure per unit of area, multiplied by the volume swept out by the piston, and that the latter method of determining the work should have been adopted in this case. The diagrams should have been reduced to a uniform scale of volumes swept out by the piston, and the indicated horse power determined from them in the usual way. When the diagram given is so reduced, it shows, for the most part, quite a reasonable result. There is no negative loop whatever, and there has been no such blunder in the setting of the exhaust valve as the diagram given in the paper would indicate. There is a rise of the expansion line before release, which is not explicable on any assumption, except that in the one hand there has been a very serious leak past the valves, or on the other hand some error in the diagram. The diagram given in the paper is very different from the one given in Professor Jamieson's published report ("Practical Engineer," July 17, 1891, page 514). The latter gives no suggestion of a negative loop, but on the other hand shows a very early release. Perhaps Professor Jamieson would explain the increase of back pressure at the beginning of the return stroke, as shown on his diagram. It is an interesting question in regard to the working of the engine. The corner of the diagram shows something of the nature of compression—that is, it shows a rise at the end of the exhaust line. This is still more marked in the diagrams accompanying the report. This cannot be compression proper, as will be at once seen on referring to the action of the engine. Perhaps Professor Jamieson could explain it. The exhaust goes on after the piston has passed the indicator connection, so that the latter part of the action is not shown on the diagram at all. Indeed it would require at least four indicators (or at least indicator connections) to show the whole working of the steam in this engine. On page 42, in enumerating the improvements recently effected in the design, Professor Jamieson commends the jacketing of the cylinder with exhaust steam "as minimising the initial condensation." It is very extraordinary that Professor Jamieson should recommend the placing of a cold wet blanket (for such it is) around

Digitized by Google

the cylinder. This is not the first instance in which this practice has been resorted to in recent times. An engine was submitted for competitive trials at the Highland Agricultural Society's Show, in Glasgow, July, 1888 (see the "Engineer," Vol. LXVI., page 98), with an exhaust steam jacket. Commenting upon the existence of such an engine, the "Engineer" remarks that "it seems scarcely credible, but it is true." He referred to this case on a former occasion (see "Engineering," Vol. XLVI., page 392). It is more than 120 years since James Watt invented the steam jacket, and it forms the first claim of his first patent, which was for a "new method of lessening the consumption of steam and fuel in fire engines." He clearly sets forth the principles on which jackets must be applied. He says, "that vessel in which the powers of steam are to be employed to work the engine . . . must, during the whole time the engine is at work, be kept as hot as the steam that enters it . . . by surrounding it with steam . . . *and by suffering neither water nor any other substance colder than the steam to enter or touch it during that time.*" An exhaust steam jacket is much worse than no jacket at all,—it makes a surface condenser of the cylinder in fact—and should not be embodied in future designs of this interesting engine.

Mr MAVOR said, with regard to this engine of Mr Brown's, they must all express the extreme interest of what has been brought forward, especially to those who are on the outlook for economical high speed engines for direct driving for dynamo machines, but he felt very much disappointed by the data given in the paper on this engine, and he wished to ask Professor Jamieson whether he could not yet bring forward some data from which they could examine the work that this engine is capable of doing. They had one table from Professor Jamieson of brake horse power and water consumpt; but a great many more particulars are required than what are given. Undoubtedly a diagram is a very important adjunct to such a table, and in this respect the paper is a complete disappointment. He was very glad that Professor Barr had taken up the illustrated diagram. First of

Digitized by Google

all, there was the point of the diagram being taken at a different speed from what the engine was running. According to the method taken in the paper, the power ought to be in ratio with the speed, but it is very different from that indeed. There is not any doubt whatever that indicator diagrams can be taken up to above 407. He had a diagram by means of the Crosby indicator, and it gave correct cards up to 500 revolutions. In speaking to the calculations from the indicator diagram, he made an attempt to work out the indicated horse power from it, but he found that the diagram appeared to be self-contradictory. Professor Barr had pointed out that it gave an impossible curve, but he was not aware of that. In measuring the weight of steam at the different parts of the curve, the results seem to be very extraordinary. He thought Professor Barr was entirely right in saying that the curve of this diagram does not properly represent what takes place in the cylinder. With regard to the results of these trials, it is astounding to read here that these results have never been equalled by any other low pressure engine. The words are: "This speed and economy of steam has not been reached by any other rotary engine, or even by any simple reciprocating engine of the non-condensing and non-compound type." Many engines have shown better results than are claimed for this one; notably the engines by Willans, and reported upon to the Institution of Civil Engineers. He wished to point out that the results as given in the paper are different from those given in Professor Jamieson's paper on "Electric Lighting in Public Buildings," page 276 of last year's Transactions, where the weight of steam per indicated horse power is given at 27 lbs., and in the paper it is put at something considerably more than that—31·47. These apparently refer to the same trials, as they are called a five-hour trial, and the mean revolutions per minute are the same, the brake horse power is the same, and other things seem to point to its being the same trial. In the remarks which he had made, he did not wish to reflect upon Professor Jamieson's method of making the trials. What he meant was the method of putting them before them. They had not, in this paper, sufficient data to enable them

Digitized by Google

to judge of the capabilities of the engine, and he would like respectfully and strongly to suggest to the author that a more detailed description of the experiments, and the method of carrying them out, is necessary to enable them to judge of their reliability.

Mr GEORGE RUSSELL said the principal requirement about a rotary engine is to be steam tight and to wear well. At the part marked E, D, there is a point bearing on the eccentric piston which can only bear on a mathematical line, and the pressure of the steam is below that, and the exhaust above, as shown on the diagram, and he wondered if there was any arrangement of the packing at that particular spot to prevent steam from getting to the exhaust side of that door. One necessary thing in this engine is very exact workmanship; and being in the hands of Messrs Paul & Co., it will have a very good chance of success, as they are celebrated for their excellence in this department.

Mr ANDREW PAUL said he was very glad that Mr Russell had brought the subject down into a practical region. There is no packing at the end of the door pressing against the heel of the piston. He might be allowed to say, in reference to the question of structural detail, that Mr Brown, when he met him first in connection with this matter, took from him a statement to the effect that about thirty years ago he had been engaged on an engine almost identical in some particulars with this, but it differed in certain other vital particulars. He looked upon Mr Brown's engine as being practically an original arrangement, from the circumstance that it has a steam admission valve altogether independent of the provision made for exhaust. He believed that some of the younger engineers present, and some of the older ones too, would be interested in knowing that so far as they had proceeded, they had found this a feature of the arrangement which lends itself very well indeed to the adjustment of steam admission without affecting exhaust. In regard to the packings, which he personally had had nothing to do with, they are part of Mr Brown's scheme; but as far as he could judge, they provide very effectually for securing that there will be no steam leakage, which has been the defect generally

Digitized by Google

of engines that have been attempted to be made in this form. The engines with which he was personally concerned more than thirty years ago had no packings whatever, and he certainly had seen other engines of various makers since, having packings more or less efficient, and designed in such a way that they could only be more or less efficient, but at all events the provision made in Mr Brown's for the packing of all rubbing surfaces seemed to him to be going on the lines of securing efficiency, and, further, approximate permanence in the parts of the engine.

Mr HARTLEY said, in referring to the diagram, he noticed the piston at the corner which is in contact with the valve is constantly altering its position, and naturally the whole of the steam pressure is resting upon it. He would like to know whether, when that is constantly altering its position, it gradually becomes rounded, because as a matter of fact it is nearly always resting on a point. That appears to be a weak point in the engine, and also the radius through which the revolving exhaust valve travels on the side, and it must have some little tendency to wear away the side of the cylinder cover.

Mr SAYERS said he thought the packing might possibly stand for the time being, when the engine was newly made, and when it was made in a first-class manner. The axes of doors must be truly parallel with the shaft. A very slight deviation from the true parallelism would cause the door only to touch at one corner, leaving a slit through which there would be a considerable blow through of steam. Then, again, the engine had the usual trouble which rotary engines have, and that was that there were wearing surfaces with very heavy pressures and varying pressures upon them. The doors would get much greater pressures upon them, judging from the diagram, than the pressures which would be exerted to turn the engine. Those pressures would, as several speakers had remarked, have to be borne by the points that were in contact, with the eccentric piston—the corresponding and heavy wear would take place on parts of the eccentric piston. When a door was shut, there would be practically no pressure upon it. Thus the eccentric piston would

Digitized by Google

be worn more at one portion of its surface than another. The engine would require such extremely accurate workmanship to secure even moderately good performance that it could hardly be repaired in an ordinary machine shop.

Mr FINLAYSON said he had had some little experience in working this engine. He experimented with the engine for about nine months, when at Messrs Miller & Co.'s Works, Vulcan Foundry, Coatbridge, and he had paid particular attention to the points which had been mentioned. The door did not wear, during the nine months of experimental working, more than one-sixteenth of an inch. So far as the packing on the doors was concerned, the springs kept them perfectly steam-tight. The doors were all scraped up to a steam-tight bearing surface, and there was no trouble with the engine so far as these points were concerned. The engine had been working continuously at Coatbridge for about five months, with the Brest brake and a dead load, so that the engine was as hard worked as was possible, but none of those points that have been mentioned ever gave them the least trouble. It was not, however, working at this time with Professor Jamieson's brake.

Mr J. MACEWAN ROSS said he was interested in this paper, and he thought Mr Brown had overcome many difficulties, and the exceptional results of the brake tests are a proof of the high class workmanship employed in the construction of the engine. However there is no doubt that durability is of more importance than economy, as an economical engine is not worth much if it will not last. Mr Brown's engine will require to be tested to prove this point; but he doubted if any engine could be durable when the piston works against the cylinder walls and doors at a speed of over 2000 feet per minute, as it does in this and all other rotary engines he knew of. He might say that this difficulty was entirely overcome in his "Rota" engine, by allowing the cylinder to revolve with the pistons, and so the relative speed of piston against the cylinder walls is reduced to about 300 feet per minute, instead of 2000 feet, as in Mr Brown's engine. That is assuming the engines to be running at 800 revolutions per minute. Two of the "Rota" engines

Digitized by Google

have been working steadily for about two years in a very satisfactory manner, without any repair, and lubricated only through a half-pint "Simplex" lubricator. It would be interesting to know how much oil was used, or if there was any exceptional quantity used during the five hours' test of Mr Brown's engine.

Mr THOM asked if any arrangement of weights had been adopted to balance the centrifugal force of the piston?

Mr BARR asked if there was any way of taking up the wear of the steam valves? Professor Barr had referred to the Highland Society's steam engine tests in July, 1888. On looking up these tests he found that a six horse power (nominal) horizontal engine, high pressure type (non-condensing), by Messrs J. & H. M'Laren, of Leeds, cylinder 8½ inches diameter × 12 inches stroke, was tried, with the result that it gave 16·28 indicated horse power, and 14·06 on the brake, equal to an efficiency of 85 per cent.; water consumed per indicated horse power per hour 29·24 lbs., and per brake horse power 39·27 lbs. He thought, in the face of this test—a well-authenticated one—the remark in one of the concluding paragraphs of Professor Jamieson's paper, that the rotary engine described gave "an economy of steam that has not been reached by any simple reciprocating engine of the non-condensing and non-compound type," was hardly warranted.

Mr MATTHEW PAUL—Before Professor Jamieson replies, he would like to make one remark on the criticism made on the indicator diagram by Professor Barr and Mr Mavor. He expected all along that that point in the paper would be severely criticised. But while he admitted that the criticism was fair, he rather thought that when looked into, the criticisms that were made would tell more in favour of the performance of the engine in the matter of mechanical efficiency than if the figures given in the diagram are accepted. Professor Barr doubted the accuracy of assuming that the card at 574 revolutions would be identical with the card at 200 revolutions. That was quite a reasonable doubt, and if there is any difference at all the card at 570 revolutions will be smaller than the card at 200 revolutions. The initial pressure

Digitized by Google

will be very much less, and therefore the card would be smaller and the indicated power would be less than Professor Jamieson is assuming it to be. Therefore the ratio of the brake horse power to the indicated horse power will be higher. If the indicated horse power is less than he calculates it to be, the brake horse power will be a higher percentage of the I.H.P., and therefore the mechanical efficiency will be higher than the 82 per cent. given in the paper. Mr Mavor said that the diagram seemed to him to be an impossible one, because the amount of steam shown in the cylinder by the card was not constant throughout the stroke, and he would like to ask Mr Mavor if he could tell any instance where the card shows the same quantity of steam throughout the stroke ?

Mr MAVOR—There seems to be more weight of steam in the cylinder at lower points of the stroke after the cut off appears to have taken place. He was quite unable to explain or understand it. He merely mentioned the thing as a difficulty which may be explained by Professor Barr's criticism.

Mr MATTHEW PAUL—That puts the objection in a different light, but in engines working with early cut-off it is quite a common thing to find the diagram line rising at the end of stroke, through re-evaporation. All he wanted to bring out was that in no engine, on account of cylinder condensation and re-evaporation, is the weight of steam shown by the card constant throughout the stroke. It seemed to him that Mr Mavor's criticism of the data given in the paper was almost hypercritical. They had given in the paper the brake horse power of the engine and the water consumpt during the trial. That was what the user of an engine would look to. If the brake horse power of an engine is known, there was no need to take a diagram to find the power in the cylinder; a diagram is taken to see whether the valve settings are in order. The water per brake horse power is the standard by which the performance of the engine should be judged. It seemed to him to matter very little what the card shows, or what the water consumpt per indicated horse power calculated from the card comes out. Unless the accuracy of the brake was questioned, and the accuracy of the

Digitized by Google

measurement of water consumpt, he didn't think anything else mattered much. If these were accepted, they had the fact that this engine uses only 33 lbs. per brake horse power-hour (according to Mr Brown's best results).

Professor JAMIESON sent the following reply in writing, as being a more detailed answer to the different speakers than his extemporary remarks on the evening of the discussion.

He was glad that Mr Brown had made good an omission in his paper by drawing attention to the assistance which the latter had received from Messrs Miller & Co., Coatbridge, and Mr Finlayson, in the development and trials of his engine.

Referring to the table of B.H.P. results given on page 44, Professor Barr says "the B.H.P. seems fairly well to follow the fluctuations of the boiler pressure." Quite independent, however, of any natural increase in B.H.P. due to an increase in steam pressure, it will be found by comparing the following results obtained when the boiler pressure stood at 93 lbs. per square inch, that the power more or less gradually increased from 19·58 to 21·69 B.H.P., or over 10 per cent.

(Extracted from Table, page 44.)

No of Reading.	Boiler Pressure.	B.H.P.
1 ..	93 lbs. ...	19·58
3 ...	93 „ ...	19·61
4 ...	93 „ ...	19·84
5 ...	93 „ ...	20·73
11 ...	93 „ ...	20·60
17 ..	93 „ ...	20·82
18 ...	93 „ ...	21·69

This increase in power with the same boiler pressure I attributed "to the warming up of the parts of the engine," which is a general expression commonly used by engineers to indicate that the working surfaces improved, *i.e.*, offered less friction as they became more perfect, due to their attaining a relatively normal temperature and condition. Perhaps I should have added, that since the engine was new or fresh from the tool shop (with the exception of a few pre-

Digitized by Google

liminary trials), a continuous run of five hours at full load with continuous lubrication would also naturally help to improve the bearing surfaces and so diminish friction. The above mentioned effects would, however, also take place with any other kind of new unjacketed steam engine under similar circumstances.

Professor Barr, as well as Mr Mavor, complains of my deductions from a comparison of the I.H.P. cards taken at 200, and the B.H.P. results at 575 revolutions per minute. No attempt was made to hide the fact that I could not get reliable cards at a higher speed than 200 revolutions per minute in this instance. I always endeavour when taking B.H.P. tests of an engine, to obtain frequent indicator cards during the trial run, as nearly as possible, simultaneous with the brake and speed observations. This was the first time that indicator diagrams from a rotary engine had been taken and published, and although I have frequently taken indicator diagrams from a reciprocating engine at speeds as high as 500 revolutions per minute, yet I found it impossible to get reliable diagrams from this rotary engine at speeds ranging from 550 to 600 revolutions per minute, owing to the manner in which the indicator was attached to the cylinder, by large but yet too long unstayed pipes, which vibrated excessively. Consequently, the next best thing that could be done was to take them at the highest speed at which steady cards could be secured. I do not agree with Professor Barr when he says "that *any* conclusions founded upon figures so determined must be entirely misleading." The B.H.P. and feedwater observations were taken with exceptional care and accuracy. They, therefore, give reliable information as to the consumpt of water per B.H.P. hour at fairly constant boiler pressures, speeds, and loads, but nothing more. I fail to see how B.H.P. trials *alone*, however exhaustive, would enable makers or inventors to "gain very much valuable information which could not fail to lead to important improvements being made in design." Brake horse power trials simply enable us to know and to compare the power and consumpt of water at one speed with that at another speed, or one engine with another when worked under similar circumstances. It is, how-

Digitized by Google

ever, the standard by which the Admiralty and all the leading authorities now compare and buy electric light and other high speed engines of small power. If shipowners could only obtain reliable B.H.P. results of their large marine engines, the buying, selling, and reckoning of such engines by I.H.P. would very soon be discarded. To enable real improvements in design to be made, B.H.P. trials should be directly associated with the taking of indicator diagrams, not mainly for the purpose of comparing the B.H.P. with the I.H.P., so as to find out the mechanical efficiency of the engine, but for the purpose of studying the distribution of the steam in the cylinder; and whether the cards are taken at $\frac{1}{4}$, $\frac{1}{2}$, $\frac{3}{4}$, or at full speed, they will, if accurate, show up deficiencies in the setting of the valves, as they did in the present case. Had I obtained indicator cards at the mean speed of 575 revolutions per minute, then most undoubtedly the initial pressure would have been less, and the area of the cards also less, so that (as pointed out by Mr Matthew Paul) the mechanical efficiency of the engine would have appeared higher than it does under the comparison made in my paper.

Professor Barr fails to notice the whole sentence about the form of rope brake used in the trials, and therefore, that what is claimed as new and as an improvement is not merely the substitution of a spring balance for the dead weight, but the substitution of *two* spring balances of different periods of oscillation for one spring balance and a dead weight, whereby the tendency of the brake to jerk or "hunt" is considerably reduced. Until Professor Barr's remarks appeared in regard to the present paper I must confess that I had not seen his diagrams at page 110 in the "Proceedings of the Institution of Civil Engineers," Vol. LXXXVIII., and curiously enough in reply to Mr W. W. Beaumont's paper on "Friction Brake Dynamometers," read before the Institution of Civil Engineers on November 13th, 1888 (see Volume XCV.),* both Professor Barr and myself explain (unknown

* In neither Vol. LXXXVIII., pp. 109, 110, nor in Vol. XCV., pp. 30-33, of the "Proceedings of the Institution of Civil Engineers," does Professor Barr claim the rope brake therein illustrated as of his design.

Digitized by Google

to each other) very similar rope brake dynamometers, having a dead weight for the tight side and a spring balance for the back or light pull. The brake which I there illustrate has, however, this advantage over the one illustrated by Professor Barr, that the double rope is carried *completely* round the brake pulley, whereas in his one the two ropes join into one after encompassing about half the circumference. The one which I illustrated was made to my directions after hearing a description of one which Professor Kennedy and others had used at some recent trials of gas engines under the auspices of the Society of Arts. Finding, however, that the dead weight of this brake hunted considerably, I obviated the difficulty by substituting therefor a spring balance, so that the two spring balances automatically checked each other, and prevented the necessity for using a dash pot, or of taking hold of either end of the rope with a view to stopping the oscillations before taking a reading. All with whom I have had to deal in taking brake horse power trials, who had previously used a dead weight (on the tight or on the slack side), have at once admitted, when they saw the easy uniform action of the two spring balances at work, that the alteration was a decided improvement, and I have it now from Professor Barr himself that he does not recollect having heard of or seen any published description of the use of *two* spring balances either with a rope brake or with any other form of brake before I employed it in the testing of the "Ajax" Glasgow Gas Engine on March 29th, 1889. I quite agree with Professor Barr's remarks about the heat generated at the periphery of the brake pulley having nothing to do with whether it is a spring balance or a dead weight that pulls the rope, and I am not aware that my remarks would have led any one to suppose that any such difference could so arise! Since writing my paper I have had an opportunity of testing a large gas engine of improved construction at Messrs Dick, Kerr, & Co.'s, Britannia Iron Works, Kilmarnock, and I obtained by means of two $\frac{5}{8}$-inch diameter rope brakes (one on each flywheel, of exactly the same design as illustrated by Fig. 8 in my paper) 50 B.H.P. without undue heating of the brake wheels and without using

Digitized by Google

any other cooling agency than the natural emisivity of the heat from the periphery of the wheels. This means 25 B.H.P. transformed into heat by each rope brake, and is the largest recorded horse power thus obtained without a special cooling appliance, such as a water trough inside or outside of the brake wheel. One advantage of the rope brake with two properly proportioned spring balances is this, that the nett brake load may be kept absolutely constant throughout the trial, and although a reading has to be taken from each balance almost simultaneously, yet the constant in the formula—

$$\text{B.H.P.} = \frac{2\,\pi r n \mathrm{P}}{33{,}000}$$

—may be worked out once for all, viz., $\frac{2\,\pi r \mathrm{P}}{33{,}000}$, and its log. written down, so that the only variable to be recorded is (n) the revolutions per minute. This permits of the B.H.P. for each observation being known within a minute or two after the speed has been taken, and the complete data noted down before taking the next speed.

Professor Barr says that my method of reducing the diagrams is "considerably in error, inasmuch as the eccentric rod is very short, and vibrates on one side only of a perpendicular to the lever in its central position, whereas it has been assumed that the eccentric rod is infinitely long." I certainly did assume that the eccentric rod was infinitely long compared to the length of the card, although it was only about three times the length of the card as taken. I have had this correction investigated, and I find that it makes no material difference. I further find that my corrected card agrees with the full-sized sectional model. I admit that the drawing of the eccentric rod and its lever, as shown by Fig. 9, Plate II., reasonably led Professor Barr to suppose that it vibrated on one side only. As a matter of fact, however, the eye of the eccentric rod, as fixed in position, was in a perpendicular line with the centre line of the engine shaft. The drawing shown was reproduced simply from the working drawing sent into the workshop for the purpose of getting the appliance manufactured.

Digitized by Google

Professor Barr also takes exception to the method of finding the work done on the piston during its revolution, and he points out a method of determining the same which is quite correct, and well known in the case of ordinary reciprocating engines, where the cross area of the piston exposed to steam pressure is constant. But here we have the area constantly changing; and, moreover, not changing synchronously with the variation in the steam pressure.

Professor Barr says "the diagrams should have been reduced to a uniform scale of volumes swept out by the piston, and the I.H.P. determined from them in the usual way." This would, however, involve quite as much and as difficult computations as the method adopted by me, except by the aid of a large planimeter, or by finding the relative volumes by paper templates and weighing, all of which means a lot of work. I believe that the result which I obtained is very near the truth; but I shall endeavour to try the methods suggested by Professor Barr in the coming trials of Brown's newest and improved rotary engines.

Professor Barr is mistaken in supposing that "both the original and the reduced diagram suggest an impossible curve of expansion, and an impossible negative loop." Had he taken the precaution to examine carefully the accurate full-sized sectional working model, he would have discovered that release takes place too late and that the volume of the pent-up steam in the cylinder is sufficiently diminished by one exhaust door coming forward, and by the curve of the piston at this part of its revolution, to clearly account for the negative loop.* I was under the same impression as Professor Barr before this model was made and tried, and consequently in my report on the engine (referred to by him as having appeared in the "Practical Engineer," of July 17th, 1891) I discarded this loop,† but now I see that the clear causes of its

* The sections shown by Figs. 3 and 4, page 38, are those of the improved engine, and not that of the engine I tested and reported upon, as clearly stated in the paper.

† The right hand indicator diagram, in my report, is identical with the original thin line diagram (Fig. 9) in this paper, *except* at the negative loop

Digitized by Google

existence are due to late release and compression. These very indicator diagrams therefore caused Mr Brown to give a much earlier and freer release to the steam in his later engines, so as to obviate the negative loop or work done against the piston. There need be no leak of steam past the piston to account for either the loop or for the expansion curves keeping so very high, and almost parallel to the atmospheric line towards the end of the card. The re-evaporation of water carried over with the steam from the boiler, due to a decided want of dry steam, and also to initial condensation with such an early cut off and subsequent re-evaporation, fully accounts for the peculiar form of the curve.* The increase of back pressure at the beginning of the return stroke, as shown by the diagram, is also fully accounted for by an examination of the full-sized working model, for it is evident from it, that this is not compression at all but *lead*. Just before, and when the point of the piston has passed the nose of an exhaust door, ED, steam is let in by one steam valve to the back of its exhaust door. Consequently the point of this door not being perfectly tight (and not requiring to be so) with the cylinder, steam naturally gets to the indicator pipe (situated at the point of the nose of the exhaust door), the moment that the side of the packing ring of the piston has passed the indicator connection. This early "*lead*" naturally raises the back pressure before the full steam pressure has been admitted to the cylinder by the movement forward of the exhaust door from its recess. Professor Barr says that "it would require at least four indicators (or at least indicator connections) to show the whole working of the steam in this engine." When we consider, however, that the two indicator connections as fitted, are only inoperative

---

and at the beginning of the return stroke. In my report I discarded the negative loop and carried down the expansion curve from the point of release to the exhaust line. With the aid of the full-sized sectional model (since made and carefully studied), I find that this was an unwarrantable liberty.

* See Jamieson's "Steam and Steam Engines," pages 130 and 133, for diagrams, showing a rise in curves due to re-evaporation.

Digitized by Google

during that part of the return stroke when the exhaust is free and open to the atmosphere, and therefore when no change in the pressure is taking place, you will admit that it would be an unnecessary complication to fit four such indicators or connections, and that the arrangement as adopted indicated all the chief points in the variation of pressure and the distribution of the steam in the cylinder.

Professor Barr says that I commended the jacketing of the cylinder with exhaust steam, as minimising initial condensation. I certainly commended in a way the combined jacketing by live and by exhaust steam as being an improvement over no jacketing whatever. I, however, strongly advised Mr Brown to use a live steam jacket all round the cylinder, but he and his manufacturers could not see their way to adopting this suggestion owing to the extra expense and the difficulty in the combined casting of the cylinder with the jacket. I must, however, strongly dissent from Professor Barr's final remarks and suggestion that the exhaust jacket, as placed in the improved engine (see Fig. 3, page 38), acts as a cold wet blanket and condenser. The temperature of the exhaust steam is over 212° Fahrenheit; the temperature of the steam in the cylinder on admission at 95 lbs. absolute is 324° Fahrenheit; and the temperature due to the mean pressure of 48 lbs. absolute per square inch is 278° Fahrenheit. Further, the exhaust steam from this engine was much drier than the admission steam, due to early cut off and re-evaporation. In fact the wet blanket, if there is one at all, lies on the side of the steam coming direct from the boiler! Any one acquainted with the action of steam as it passes through a triple expansion marine engine, knows that the steam coming from the low pressure cylinder is, as a rule, much drier than the steam that enters the high pressure cylinder. And in ordinary simple engines, where a large quantity of water is carried over in suspension with the steam, due to the want of a steam dome and to many awkward bends (as unfortunately happened in the present case), as well as due to initial condensation, the re-evaporation inside the cylinder is such, that the exhaust

Digitized by Google

steam is drier than the entering steam, and thus may be made to form a dry jacket. I admit that it is an imperfect jacket, because a theoretically perfect jacket should be so arranged that the temperature of the jacket will always be several degrees above the falling temperature in the cylinder, and that the temperature of the jacket must fall proportionately with the fall in temperature due to work done and expansion in the cylinder. An exhaust steam jacket, under the circumstances named, is therefore much better *than no jacket at all*, for it reduces the difference of temperature between the inside of the cylinder and the outside by an amount equivalent to the difference between the temperature of the exhaust steam at say 214° Fahrenheit and 50° or 60° Fahrenheit, the temperature of the atmosphere, or say by over 150° Fahrenheit.

Mr Mavor's disappointment at not finding more details in the paper in order to critically examine and check the results of my observations, was evidently not shared in by the other members present, and I can only attribute this disappointment to a zealous desire on his part to know more about "Steam and Steam Engines."* I may, however, mention one detail for his edification, viz., that the consumpt of water was most carefully gone into, by weighing the quantity of water which just filled the feedwater tank. Mr Brown and I measured separately, on different days, this quantity, and we only found half a pound of difference, or barely one-sixth per cent. I added this one-sixth per cent. to the consumpt as measured by me. Mr Matthew Paul has very fully and clearly answered Mr Mavor's other inquiries, except *re* the comparison between the consumption of other *simple* non-condensing engines and the one under

* A complete working engine, a full-sized sectional model of the engine as tested and reported upon, a half-sized sectional moving model of the improved engine, full sized wall diagrams of the double door, and of the single door engines, enlarged indicator diagrams, as well as the actual fitting strips and springs used in Brown's engine, were exhibited and explained to the meeting; besides which, all the diagrams and the latest information of which Mr Brown and myself are yet in possession, has been fully laid before the members.

Digitized by Google

question. There can be no doubt whatever that the best results obtained from this rotary engine compare most favourably with the best published results of Willans' non-condensing simple engines, and of the tests by the Highland and Agricultural Show in 1888 instanced by Mr Barr. The difference, small as it is, is in favour of Brown's engine. The discrepancy in the consumpt of water per I.H.P., noticed by Professor Barr and by Mr Mavor, between my published report (issued last June) and my present paper, is entirely accounted for by the additional information obtained from the full-sized sectional model with respect to the negative loop, the final part of the expansion curve, and the correction in the indicator diagram for the relation between the circular motion of the eccentric (which actuated the indicator cord) and the straight line reciprocating motion of the indicator cord itself. We live and learn, and in a new investigation like that with which the present paper has dealt, we are only too glad to take advantage of the criticism and general opinions of members.

The criticisms of Mr George Russell, Mr Hartley, and Mr Sayers were fully answered by Mr Andrew Paul and Mr Finlayson. In regard to Mr MacEwan Ross's remarks, I have only to say that I would like very much to see his "Rota" engine subjected to the severe brake-horse-power tests that have been applied to Mr Brown's engine, and also to see a set of indicator diagrams taken therefrom, when we would be in a better position to compare it with the Brown engine.

Mr Thom asked if any pains had been taken to balance the piston. Most certainly there have. If he will look at Fig. 2, Plate II., he will see that there are two fly wheels, one on each side of the cylinder. Upon each of those fly wheels is placed a weight, so that their combined effect is such as to *exactly* balance the piston.

I went down to Messrs Matthew Paul & Co.'s Works, last Saturday, and there saw a double door and a single door engine joined up by steam pipes to their boiler. Unfortunately, neither the necessary measuring apparatus had been fitted, nor the pre-

Digitized by Google

liminary working trials got over, so as to enable me to lay before you at present an account of tests with these improved engines. Should I, however, be placed in a position to obtain a set of observations before the bound Transactions are completed, I shall have much pleasure (with Mr Brown's and the Institution's permission) in incorporating them as an appendix to my paper and this discussion.

The PRESIDENT said they had heard Professor Jamieson's reply to the remarks that had been made in the discussion, and he was sure they would agree with him that he had replied to them very ably. One of the great objects of this Institution is to bring forward papers that will not simply be read and passed on, but will cause discussion among the members, and elicit their views on the various points; and a paper which brings out a discussion such as they had had to-night, is, he thought, one that is worthy of a very hearty vote of thanks from the Institution.

The vote was heartily accorded.

Digitized by Google

Digitized by Google

Electricity in its Relation to Mining.

By Mr Ernest Scott, London.

(SEE PLATES III. AND IV.)

Received and Read 24th November, 1891.

The application of electricity for the transmission of power in mines has within the last few years (and especially within the last year) been seriously engaging the attention of mining engineers and managers, and those engaged in this branch of electrical engineering are being kept busy putting down plant. In fact, so many have been put down that it has already almost ceased to be a novelty, and there seems every promise of effecting a small revolution in the mining industry. Already above fifty mines are supplied with electricity in the United Kingdom.

Indeed, it may be truthfully stated that by the aid of electricity mines which have been commercially unworkable owing to their depth, or the great distance of the working face from the pit head, can now be turned into profitable undertakings.

The distance to which electric energy can be transmitted is almost unlimited, as the recent experiment in Germany has tended to show. In this experiment about 150 H.P. was transmitted through three cables slung on poles, along the railway track, from Laufen, on the Neckar, to Frankfort, a distance of over 100 miles.

There is thus opened to us the possibility of bringing all the necessary power from our source. The dynamo room at the pit bank, or perhaps a waterfall some miles away, carrying it through

Digitized by Google

copper wires, and utilising it for lighting the roadways, pit head gear, &c.; for signalling, firing fuses, charging electric safety lamps, or for driving any of the following machines:—

Coal-cutters;
Pumps;
Hauling machines—(1) continuous, (2) main and tail, (3) single rope, (4) portable;
Extracting machinery;
Winding machines;
Coal-borers;
Rock breakers;
Grinding jigs;
Screening machinery;
Amalgamators;
Rotary drills;
Percussion drills;
Fans;
Locomotives on electric tramways;
Electric tramways;
Windlasses;
Quartz mills;
Stamps;
Magnetic separators, &c.

It is therefore very evident that the great function of electricity is that of power transmission, and we are now enabled to utilise sources of energy hitherto inaccessible, and deliver it over large areas, with greater safety and economy than any other system.

There was at first considerable hesitation amongst mine owners and engineers, owing to the large outlay in laying down new plant, and the possibility of an explosion, attended with loss of life, in the event of a failure. Coupled to this is the fact that mine owners are rather conservative in the matter of machinery, as witness the quantity of old fashioned, slow moving Cornish engines and boilers, generating steam at less than 50 lbs. pressure, which are at the present time in use.

Digitized by Google

The following figures, showing how the coal is used up, may be interesting. 170,000,000 tons of coal are raised per annum in the United Kingdom, representing a money value of £45,000,000. Of this amount:—

Used at the collieries for power purposes,	6 per cent.
Exported,	15 „
Used for metallurgical operations,	33 „
Consumed in dwelling houses, factories, locomotives, &c.,	46 „

The average amount of coal used at collieries will in the near future be reduced by the adoption of more efficient machinery. The 6 per cent., representing about 6 lbs. of coal per I.H.P. per hour.

In coal mining the cheapness of fuel, and in metal mines the uncertain nature of the mineral deposits, explain away a good deal of the reluctance with which modern and much more efficient machinery has been taken up. It had therefore to be very clearly proved that what was said of electric transmission was realisable before orders for such plants as that at Normanton, or as Lord Durham is having put down, were placed.

Electric power can claim the following advantages over steam, hydraulic, and we might almost say its only rival, compressed air:—

1. Greater efficiency, and therefore reduced first cost and expenses in working, than other mediums of power transmission over considerable distances — say above half-a-mile.
2. The greater ease with which the comparatively small copper conductors can be manipulated and kept in order as compared with piping, especially where there are falling roofs or shifting floors.
3. The facility with which machines which require to be moved occasionally—*e.g.*, coal-cutters, pumps, &c.—can be advanced along the roadways as the work proceeds, or taken about on bogey carriages from one part of the working to another.

Digitized by Google

As energy can be produced from coal at the bank top cheaper than anywhere else, it is the method employed for distribution where the expense comes in, the question being which is best. The methods of transmitting power may be classified as follows:—

Rigid connection Belting and ropes Steam	Positive.
Hydraulic Compressed air Electricity	Indirect.

Hydraulic might be classified under "positive," if the water was taken straight from the reservoir to the motor without the intervention of a steam engine and pump.

A *rigid connection* is the simplest plan of transmitting power, and it is the one most generally used in the form of the spear rods to the Cornish pumping engine; the rods and the pump, however, take up a considerable portion of the shaft. They are very heavy and cumbersome, and the direct acting force pump seems to be taking its place, the energy being transmitted through piping or cable.

Wire rope transmission is cheaply put down, but it requires an expensive maintenance. They can be used either with a continuous or reciprocating motion, but guide pulleys have to be placed at intervals of about 100 yards, which require to be well lubricated. There is also the objection of the great weight which has to be kept in motion, and the stiffness of the rope. It is efficient for short distances, but becomes the reverse at two miles and a half, the efficiency coming down with a run over that distance.

Electric cables may claim the following advantages over piping. They are more convenient to handle, can be got into places inaccessible to piping, and they are easily supported in the pit shaft, and quickly placed in the roadway; leakages are less likely to take take place (nearly all piping having a joint every nine feet or so), and if the leakages do take place they are much more conveniently

Digitized by Google

dealt with; *water* makes the roadways damp and slushy; a leakage of *steam* renders the road unfit for travelling in, disintegrates the roof, and dry rots the timbers; aud a *compressed air* leakage greatly lowers the efficiency, but helps the ventilation to a slight extent. The pressures obtainable in a pipe are limited on account of strength of the material used.

Steam transmission of power is extensively used where the distance is short, say a quarter or a half mile, and the power transmitted does not exceed 12 horse power. Of course the great objection is due to the loss of pressure through condensation; and even if this were partly got over by expensive non-conducting coverings, the distance transmitted would be very limited. Of course the more general adoption of steel girders—which, although costing 25 per cent. more in the first instance, have the advantages of lasting longer, taking a greater strain, and saving labour in erection—would get over this difficulty of dry rot in timbers mentioned above.

Hydraulic power transmission has the great disadvantage that the waste water has to be lifted out of the mine, and it is very inefficient where the motor does not work at full load. If the head of water can be got without mechanical means and without payment, as in some mountainous or well watered districts, then it is the most efficient and cheapest possible, but this is an exception. Some hydraulic pumps, however, especially that patented by Mr Joseph Moore, answer very well, the reciprocating action of the engine on the bank being transmitted to the pump in the mine by small water pipes.

Compressed air has the great advantage of being absolutely safe in gaseous atmospheres, that is, if we accept a low efficiency and do not heat the air at the motor end. It also has the advantage that if an accident should happen sufficient to burst the pipe it would assist the ventilation. It might also be turned on by the men, and in any case the exhaust from the motor can always be used for ventilating purposes. Very few compressed air plants in mines can show greater efficiency than 40 per cent.; the efficiency of the system gets lower the higher the pressure which is used. About

Digitized by Google

40 lbs. above the atmosphere is the one generally adopted, except where smallness of piping and portability is a desideratum—*e.g.*, rock drills—then 80 lbs. may be used, the efficiency then being about 20 per cent. If there is no leakage, however, the losses in the pipes due to friction are very low, and were found by Professor Kennedy at Paris to be only 2 per cent. in four miles of piping.

It is evident that each of the different methods of transmission has its advantages, and that for very short distances a rigid connection wire rope, steam, or water, is convenient, depending on the circumstances. The difficulties in transmitting power becoming greater the further from the source of power we go, the question becomes, shall we use compressed air or electric transmission? I shall endeavour to show the latter is the best, and, by instancing a few of the machines and tests that have been made, bring before you what has already been done in that direction.

The chief objections raised against electric machinery in mines are :—

1. The machines are too delicate in their construction, easily damaged, and therefore require specially skilled attendance.
2. Danger of fire due to (*a*) sparking at the commutator, (*b*) the spark caused by breaking of the cable conveying the current, (*c*) short circuits, (*d*) overheating of wires—this referring more particularly to gaseous coal mines.
3. Shocks.

DELICACY OF CONSTRUCTION.

As an answer to this objection I may say that there is a very general idea abroad that electric machinery has certain adherent defects, and on that account it is impossible to run for any length of time without a break down, and that at its best it requires very frequent repairs and adjustments.

Now, this is incorrect, just as it was incorrect to state in the early days of the steam engine or gas works that it would be impossible to make an engine or a gas works to run for three days

Digitized by Google

without a mishap. The first makers of steam engines were theoretical men, and it was not until born engineers like Smeaton and Watt took it in hand that we got anything like a perfected article. In the same way engineers have taken dynamo-electric machinery in hand, and are producing machines which, if need be, will run for months, day and night, without stopping, in fact are doing it now in London. Machinery stopped or the lights went out in the old days in most cases through imperfect mechanical construction. This has been remedied, and if a customer likes he can have his machine as strong as a "stonebreaker," figuratively, of course, and why should he not? There are no reciprocating parts nor a fraction of the very varying stresses which are brought to bear on certain details of an engine. There is no knocking, the motion being one of simple rotation, and the dirt and dust can be easily kept from the bearings, in fact, a good electric motor can be made to work without repairs longer than any other class of machinery; it is merely a case of careful construction and proper safeguarding.

DANGER OF FIRE.

The danger of fire by sparking at the brushes and the commutator is neutralised by covering in either the commutator above or the whole of the armature with gas-tight metal cases, doors and windows being fitted in.

Messrs Davis & Son enclose the commutator, and therefore reduce the enclosed space to a minimum. The commutator is inverted, the brushes being inside. The door or end disc is so arranged that the machine will not work unless it is in its closed position. It is therefore equivalent to a locked safety lamp. The junction between the fixed and the revolving portions of the machine is made by a flame-tight joint. (See Plate III., Fig. 1.)

Messrs W. T. Goolden & Co. enclose the whole of the armature, and therefore protect against the danger of short circuits in the wire, and prevent anything getting between the armature and the magnet. There is no ventilation through the armature, but it is found that this does not cause undue heating, the heat being

Digitized by Google

conducted to the covers and away by radiation and convection currents. It is merely a question of giving a rather larger cooling surface than would be allowed if the machine had not got the covers. (See Fig. 2.)

Below two square inches per watt lost in heat in the armature will keep the temperature of an enclosed motor within 80° above that of the atmosphere.

The magnet coils, terminals, switches, and resistances are also placed in gas-tight metal boxes, so that the motors may be safely run in fiery places, and to serve as protective coverings.

These coverings have been tested on several occasions in gaseous mixtures.

A motor fitted with the Davis & Stokes' commutator covers was tried in an explosion mixture, which fired and burnt in a safety lamp, so that the lamp had to be taken out to prevent the gauze getting red hot and exploding the gas. The motor was then run with perfect safety for half an hour in the mixture, the brushes being purposely made to sparkle all the time. At the end of the test a hole was cut in the mica window, when the gas fired at once, the commutator and brushes having become heated to a very high temperature.

The Messrs Atkinsons' put a "Goolden" enclosed motor for five hours in an atmosphere of coal gas, and at the end of that time found that only ·5 per cent. of the gas had percolated through the joints. It would therefore have taken 25 hours before it had got dangerous, and one would have to use a great stretch of imagination to expect anything half as bad as that to occur in practice.

The next objection is that the cables might be broken and an arc formed between the ends. In a colliery where falls are frequent the cables should be buried below the floor, but if the roofs be good it is the usual practice to carry the wires on insulators, a good serviceable job being made of them. After numerous inquiries at collieries where the electric plant is laid down and the cables properly put up, not a single accident of this kind is reported. It is again simply a case of workmanship.

Digitized by Google

The Messrs Atkinson have, however, devised a safety mining cable (Fig. 3) which promises very well. This cable consists of two parts, the internal being made up of several small copper wires wound in the form of a spiral, and capable of almost indefinite extension. These are thinly braided over, and then the cable proper of the required sectional area is laid on, this being of course insulated in the usual way. The idea is that in the event of a breakage and consequent spark, this spark shall be made to show itself in a suitable apparatus on the pit bank instead of at the point of fracture. The apparatus takes the form of a fusible cut out and knock off switch, which can be conveniently fixed on the main switchboard. A resistance is put in between the internal and external conductors at the motor end of the cable. The action is as follows:—

If the outside cable only is broken the extensible spiral conductor has for an instant to carry the whole current. The fuse therefore at once melts, the weight is dropped, and the main current is broken by its knocking out the switch. (See Fig. 7.)

If the cable is bruised so that the two wires touch, or if both the wires are cut clean in two, then, owing to the potential at the extreme ends of the cable being the same, and there being a small potential difference between the two conductors all along the line, the resistance is short circuited, and there is a momentary rush of current, the fuse melts, and the main switch is broken as before. The insulation between the two wires is only very thin, and we should have to imagine an exceedingly sharp non-conducting instrument which would cut across the wire without bringing them into contact, an impossibility in fact.

SHOCKS.

For underground work no current at a greater pressure than 700 volts should be used, electrical engineers being agreed that below that pressure there is no danger to human life. Of course the higher the electro-motive force the smaller the wire, and the lower the first cost.

Digitized by Google

It is, however, to the contractors' advantage to make everything about the installation as secure as possible, as the men are apt to neglect to adjust the brushes if they think there is a danger of receiving a nasty shock.

In the event of the cable being laid on the ground, a man might receive a fairly smart shock with 300 volts if he stood on the cable with wet boots. The shock would not hurt him, but there is the remote possibility that he might place himself, in springing off, in front of a train of waggons. It is advisable, therefore, either to bury the conductors or to fasten them to the roof or sides.

The fact that they might receive a shock will no doubt deter the miners from interfering with cables or machinery. They are rather a conservative lot of men, and almost every innovation meets with opposition; they have, for instance, declined to remove the coal which has been undercut by electric coal-cutting machines.

It may be as well to inquire into some of the causes of explosions in coal mines.

It would appear impossible for tools of any kind in working coal to strike against pyrites or any hard rock without giving off sparks.

The experiments made at St. Etienne, in France, go to prove that these kind of sparks will not fire an explosive mixture. As an extra precaution, however, it has been suggested that aluminium bronze containing 2 per cent. of silicon should be used for the tools, as it seems this alloy produces no sparks. There is, however, an objection to it, owing to the liability of the metals not to mix properly and so give the proper hardness. Spontaneous combustion is often the cause of fire, and it may be caused by oxidation of organic constituents, by iron pyrites, or by pressure. Coal, especially when in a fine state of division, absorbs oxygen, and in doing so becomes heated, and such absorption is favoured by the presence of moisture.

Carburetted hydrogen does not become explosive until there is an excess of hydrogen present. This hydrogen can only be supplied by

Digitized by Google

the moisture, therefore it is important to ventilate the mines with as dry air as possible.

The safety lamp is only safe up to a certain velocity of the current of air, but an enclosed motor being next to absolutely enclosed, would be safe for several hours in the same current.

Blasting operations in fiery mines are always attended with danger, and a flameless explosive has yet to be invented.

Engineering and scientific precautions go for nothing if there is not at the same time constant vigilance exercised. It therefore seems to be high time that employees in mines were educated and made conversant with the properties of gasses, with the theoretical reasons why certain precautions have to be taken in ventilating, &c. In this way we should have fewer accidents, and the colliers as a body would be a more intelligent set of men than they are at present.

MACHINERY.

The machines to be described are in most cases of well-known type, adapted for combination with the electric motor; and I may here remark that the handiness and ease with which the motor can be worked in combination with any kind of machinery, either by belting, gearing, or friction wheels, in any position, is one of its main features.

Whatever machinery is put into a mine must be practicable in every sense of the word, for there is perhaps no other situation where it gets so hardly dealt with. Strength and durability must come before efficiency, several breakdowns quickly producing a feeling of insecurity. The motor, therefore, must not be affected by the drip of the water in wet localities, by rapidly varying loads, or by dirt and dust; it must be unaffected by changes of temperature; it must be strong enough to withstand an occasional fall of the roof; and should be capable of going without continued attention.

It very often happens that mining machinery—as, for instance, pumps—in the event of a flooding of some part of the mine, may have to make very long runs. It is especially necessary, therefore,

Digitized by Google

that all parts should be exceptionally strong, and the wearing surfaces and lubricating arrangements so arranged that there shall be no heating, the pressure in the bearings coming at right angles to the joint.

All handles for brakes reversing, starting, stopping gears, &c., should be arranged as simply as possible, so that any labourer can drive the machinery. It is usual to supply the driver with an ammeter in a convenient position, so that he can tell say how many trams he is hauling, and when one of them leaves the rails.

When (as is often the case in mining operations) it is necessary that the location of the machine and motor should be quickly changed, they are mounted on a trolley so that it can be easily moved by simply reeling up the conductors and wheeling it into the desired position.

Ropes and belting form an elastic connection between the driver and the driven, a kind of springiness which takes the jar of the armature; they take up a considerable amount of room, however, and are liable to be snapped or thrown off on a sudden accession of load. They are at a great disadvantage in wet and dirty situations owing to the rapid deterioration, and it may sometimes happen that machines have to stand in water. If belting was used in the case say of a winding machine when the direction of rotation is altered, the strain would be very great, and a serious accident might ensue if the belt broke.

Link belting is perhaps the best form, although it stretches a great deal. Where large powers are transmitted one belt is put over the other.

Messrs Goolden, who have had considerable experience with mining machinery, find it best and safest to use gearing. It is certainly noisier than belting, although the improved methods of originating the teeth make them run sweeter than formerly, but the machines can be put together in a much more complete form, whilst the precautions which are adopted in building up the armature effectually prevents any abrasion of the insulation from jar and vibration.

Digitized by Google

Helical wheel teeth are found to answer best, the pinion being fitted with an extra strong key, but allowed to slide lengthways with the shaft, and so align itself with the gear wheels. In order to decrease the noise in small toothed pinions running at speeds at from 1000 to 1500, a composite structure has been adopted, the whole is built up on a bush of alternate layers of sheet iron and vulcanised fibre, the teeth being cut by machinery.

It is usual to protect the gear wheels with iron casing, more especially where the roof is loose. These covers should, however be capable of being quickly removed.

All the machinery should be designed so that the motor can be instantly stopped or started with full load or without unduly strain ing anything.

ELECTRIC LIGHTING.

The advantages and disadvantages of electric lighting are now fairly well known. There is no doubt that incandescent lamps are eminently suitable in mines; they do not require any trimming, are not affected by currents of air, and from their nature it is impossible for them to cause an explosion. Arc lamps, or large candle power incandescent lamps, can be used for the pit head, gear screens, &c.

To drive the machinery and lamps from the same set of mains the lamps may be arranged in series of 3 or 4 to suit the voltage. Machinery and lamps may be run from a compound or shunt wound dynamo by running separate pairs of mains, and then the one can be switched off without affecting the other. The best arrangement, however, where the plant is large, is to have the dynamos separately excited; the smaller or exciting dynamo being made large enough to run the lamps as well. The potential of this lighting and exciting machine may be 100 or 110 volts, a separate pair of mains being run for lighting.

Of course all mines which have got the electric light or transmission of power plant installed are in a position, with a small further outlay, to adopt electric safety lamps.

Digitized by Google

FIRING EXPLOSIVES ELECTRICALLY.

The firing of fuses electrically effects a saving of time and reduces the proportion of missed shots, and therefore the cost. Any number of shots may be fired simultaneously, and this is an advantage where a considerable weight of material has to be moved.

ELECTRIC BELLS AND SIGNALLING APPARATUS.

The telephone is utilised at the La Perronière mine in France, and now that the patents have run out we shall soon hear of them being employed for a similar purpose in the United Kingdom. Electric bells are extensively used in Yorkshire and South Wales, a pair of bare wires being run along the roadways, and the circuit so arranged that when the two are put into contact anywhere the bell is rung.

The working of an electric bell by means of a manipulator in the cage commends itself at once. It would be also useful as a means of preventing very serious accidents in the event of a displacement or derailment of the cage. It could be done in several ways, one being to have a bare wire suspended in the shaft through which contact is made in case of derailment.

ELECTRIC SAFETY LAMPS.

The use of the ordinary safety lamps which give a light merely sufficient to make darkness visible, and therefore strain the eyes of the men who work with them, is becoming a matter of importance in our colliery districts, because the knowledge that the lamps in use are bad for the eyes goes far to discourage the rigid obedience to the law which compels the use of them.

The experiments conducted by Dr Court in the Midland districts seem to show conclusively that the insufficient light given by the ordinary safety lamp is the cause of the great prevalence of eye diseases, such as nystagmus, night blindness, etc., and when we couple to this the fact that the wire gauze lamp is only safe up to a

Digitized by Google

certain velocity of air, I think portable electric lamps can safely claim the following advantages:—the light giving body, is highly protected, very little heat is produced, it gives no smell or smoke, so that the air is not vitiated by noxious fumes, there is no temptation to trim the light, or to light pipes, etc., for interfering with the light giving body would simply put it out. The lamps may be fitted with a switch, and can be lighted or put out as often as required. They can be kept in almost any position, even horizontal, for a short time without any inconvenience, and are thus very valuable for examining roofs and giving a superior light, 1 and 2 C.P. as against the $\frac{1}{3}$ to $\frac{1}{2}$ C.P. of the old safety lamp, they enable more work to be turned out in a given time. The ordinary safety lamp has this advantage that it shows at once if fire damp is present, and steps can then be taken to drive the gas away.

There are several types of lamps in the market—Berquet, Pollak, Stella, Bristol, &c.

In the Bristol electric safety lamp the battery consists of 3 accumulators, its weight is about $3\frac{1}{2}$ lbs. (the Hepplewhite Gray ordinary safety lamp weighs 3 lbs.), and it burns for 10 hours. The battery plates are enclosed in an ebonite cell which is again placed in brass tube, a simple arrangement well calculated to stand rough treatment and accidental shocks. Inspection is easily made with a special key, which would not be given to the miner. They consume during charge 1 H.P. per 160 lamps, and take from 6 to 8 hours. The cost of lamps is 35s each in quantities; 500 would therefore cost £875, and for a 500 lamps plant complete £921. Renewal of battery would cost 5s about every three years. The incandescent lamps bring the main source of renewals, and they will last 600 or 700 hours. Total cost of lamps per burning hour ·0905 or ·726 per day of 8 hours, and this would give about 4d as the total cost per week per lamp.

One man is easily able to attend to 500 lamps, 250 burning at a time; his wages would be 35s per week. Allowing for depreciation the yearly cost of a 500 lamp plant complete would be £568 6s 4d, or rather more than 20s per lamp.

Digitized by Google

HAULING AND WINDING MACHINES.

It appears from the returns that, as a rule, the deepest mines are the most productive, therefore long haulage roads are becoming more common every year. A good proportion of the roads having gradients which will not admit of the locomotive they have to be worked by wire rope haulage, the hauling machine being erected in some central position under ground. There are several systems of haulage—continuous rope, main and tail rope, and single rope.

In the continuous rope hauling machine shown, a "Goolden" enclosed mining motor drives the clip pulley through two sets of helical gear wheels, the rim of the pulley (Mr F. Hurd's patent) is fitted with a number of clips, which when pressed by the entrance of the rope close on it, grip tightly but without cutting. Each clip is provided with a volute spring which gives a positive releasing motion on the running off side, thus preventing any undue wear of the rope.

The main and tail rope hauling machine (Fig. 5) has two drums bushed with gun metal, and they revolve loose on the shaft. A clutch between them enables either drum to be driven at will.

The single rope hauling machine being used for drawing tubs up a steep incline, it is fitted with only one drum, as the tubs run down again of themselves being kept in check by the brake.

Portable hauling machines (Fig. 4) are intended to save the work of horses. It is fitted with trolley wheels, and so can be moved about as required; it can be taken to the top of the incline and there scotched up, temporarily working as a fixed machine; or it will work itself into position by winding up the rope, as it climbs the incline, the current being supplied through an easily handled light twin wire.

Winding machines are provided with a switch and lever to alter the direction of rotation of the motor. The lever handles are insulated with india-rubber, bound with whip cord, and the attendant stands or sits on an insulated table.

The reversing switch has to do three things—it has to put in a

Digitized by Google

series of resistances, and so cut down the current going through the armature; it has to break the main circuit, and has then to cross the brush leads to send the current through the armature in the opposite direction (Fig. 6).

To run in the reverse direction, the circuit is made and the resistances gradually cut out.

If the machine were fitted with laminated brushes, the head would also have to be altered.

Messrs Goolden have recently supplied geared continuous hauling machines, which were intended to draw 4 loaded tubs up an incline averaging 9 inches per yard. In the trial 8 loaded tubs were put on a part of the incline which was 16 inches per yard, the motor was then suddenly started and stopped several times without mishap, where belting would as likely as not have been thrown off.

In an electric windlass, made by Messrs Ganz & Co. (Fig. 9), the winding drum is driven through the worm and worm-wheel. This machine was built for the purpose of raising earth in the sinking of a shaft. It is fitted with a series of resistances and an automatic arrangement, which can be easily adjusted, so that as soon as the load has arrived at a certain height, successive resistances are put in, and the current finally interrupted, a brake being thrown in gear at the same time.

PUMPS.

The safety of a mine very often depends on the efficient and prompt dealing with a sudden influx of water into the workings, and what is wanted in that case is a pump that can be quickly got to work on the spot; also the mode of dealing with the large quantities of water often met with in sinking pit shafts is an important matter.

If Cornish pumps are used, the continuous lengthening of heavy spear-rods is an objection, and if the modern power pump is placed at the bottom there is a difficulty in finding room to carry on the sinking operations. Perhaps the best way and one to which electrical transmission lends itself beautifully is to suspend the

Digitized by Google

pumps (fitted with telescope suction) in the shaft by means of stout wire cables attached to capstans on the surface, the machine being steadied temporarily by props. Several pumps are at work suspended like this, and doing very well.

With electric pumps the three throw crank is generally adopted because the stress on the motor should be as regular as possible. The motor in the Goolden pump runs at about 550 revolutions per minute. The speed being reduced through two sets of helical toothed gearing.

A very compact pump is being made by the Sprague Company in America. A 50 H.P. plant is 3-6 × 7-0 × 2·9 high. The cylinders are interchangeable, so that the height lifted and the water delivered can be varied.

VENTILATING FANS.

The atmospheric condition of a mine is one of primary importance, and anything which will give a better ventilation than at present in vogue in some collieries should be welcomed, as there can be no doubt that the furnace system of ventilation increases the danger of fire, and makes it almost impossible to ascend or descend by the up-cast shaft in case of an accident.

With ventilating fans, as with rotary pumps, electric motors are especially suitable, since the high speed required enables them to be coupled direct. The locations of fans, too, are often such that a pair of copper cables can be very cheaply and easily laid down where piping would not go.

The advantages claimed by using the exhaust of compressed air motors for ventilation is questionable, and could be done in a more efficient manner by means of a system of electrically driven fans, or by putting down a separate steam engine and piping.

It might be interesting to note the Blackman fan (Fig. 10, Plate IV.), patented by Mr Watel. The fan and motor are combined to form one piece of mechanism, a multi-polar motor in fact, with an armature of very large diameter, and small cross section. The armature is carried at the periphery of the fan, the

Digitized by Google

field magnets being in a circle round it. The commutator is on the spindle, and the end of the armature windings are brought to contiguous sections, alternate sections being in electrical contact, so that the current is reversed through the armature the moment the poles come together, when the pole on the armature is attracted by the next pole of the field magnet, and so on, to produce rotation. The magnets are shunt wound. Those fans would no doubt be found useful in ventilating side passages.

DRILLS.

Several electric rotary drills have been made. In drills we want strength combined with lightness, so that one man can handle it, and this cannot very well be got by attaching the motor direct on to the drill spindle. It is usual, therefore, to mount the drill on a separate trolley, and drive through a flexible shaft, or an endless band and grooved pulleys. The Ingersoll percussion machine, in which the drill is impressed forward by a powerful volute spring, lends itself very well to being driven in this way.

For hard rock, however, the machine which gives most promise is that in which the energy is given to the reciprocating drill spindle by a current flowing alternately through a pair of solenoids or coils of wire, thus alternately attracting and repelling the mass of soft iron attached to the drill spindle.

The Van Depeole percussion drill has three coils or solenoids; the outer ones consisting of a few turns of thick wire, and the inner, which has the chief magnetising effect, of many turns of thin wire.

The continuous current dynamo has a fixed pair and a rotating pair of brushes, and will therefore give continuous, alternating, or pulsating currents, depending on how the brushes are coupled up. The outer coils are connected to the rotating brushes and are therefore traversed by alternating currents, the phases of which are represented by the waving line. The polarities of these coils will, of course, change with every alternation.

The inner coil is traversed by pulsating currents, represented by

Digitized by Google

the thick straight lines, which are got by connecting to a fixed and to one of the rotating brushes. The polarity of the coil, iron cover, and casing is always the same, it rises and falls with the current, being a minimum at F_1 and a maximum at F_2.

It is evident that at the points C and D the outer coils will have ceased to attract the core. On each side of that point, however, they begin to exhibit polarity, and the iron core is moved backwards or forwards as the case may be.

The core and drill is brought to a standstill at each end by the three similar poles coming together, that is, the poles of the iron casing, the core, and the coil; they repel, and the drill is started off in the opposite direction. The drill shown at the Frankfort Exhibition struck 325 blows per minute. The moving parts are only the iron rod to which the drill is attached and a turning arrangement at the back to move the drill round part of a revolution at each stroke.

ELECTRIC LOCOMOTIVE.

In electric locomotives for mining, the overhead wire system, which has been so extensively adopted in America, and has quite recently been tried in Leeds, is perhaps the best, the connection being made by a rubbing contact, or through the wheels of a little trolley running on the wire. The locomotive is fitted with reversing levers so that it can either pull or push the tubs.

It is surprising how very compact the machine can be made, a 15 H.P. Sprague locomotive for an 18 inch gauge is 2 feet 6 inches × 2 feet 6 inches × 5 feet 2 inches long, and weighs less than two tons. They can be used in places inaccessible to the pit pony, the height of the driver's head from the floor when he is in a sitting position on the car does not exceed 3 feet 6 inches.

We cannot hope for high efficiencies with these machines in mines, seeing the severe conditions under which they will have to work steep grades, sharp curves, in contracted spaces, and on rough roads. But in underground workings, when the fouling of the air by steam and smoke is very objectionable, or in coal mines, entirely

Digitized by Google

out of the question, there is no doubt an extensive field for electric traction.

The General Electric Power and Traction Company have built an electric locomotive to take the place of five horses on a road 500 yards long, in the Wharncliffe Silkstone Collieries, the incline being 4 inches to the yard. The machine got a direct pull on a rope which is fixed at either end and lies parallel to the rails. The rope is passed round a wheel geared to the motor, the current being supplied by an overhead wire.

COAL CUTTERS.

Broadly speaking, they may be divided into two classes, those with wheel cutters in which the tools are fixed to the periphery of a disc, and which bring out the cuttings direct, and the bar cutters, which have the tools fixed in the form of a three or four threaded screw, the cuttings being either drawn endways by the screw or fall back into the space behind which has been cut. They are less liable to be held fast by a fall of coal, and will cut to a greater depth without jamming than the wheel cutter, and the blunt cutter tools can be easier replaced.

A bar cutter machine built by Messrs Goolden & Company, running at 500 revolutions per minute, will undercut on an average 20 to 30 square yards of hard coal in one hour, including stoppages. At Lord St. Oswald's Colliery, Nostell, as much as 54 square yards were undercut in one hour, or about 43 yards to an average depth of 3 feet 8 inches.

The machine is mounted on wheels laid alongside the face of the coal, the cutter bar is then turned through an angle of 90°, cutting its way into the coal. It is here locked, and the whole machine is then drawn along, either by hand, with winch and wire rope, or automatically by small hauling gear fixed on the front of the machine.

The cutter tools in the bar are arranged so that grooves are cut in the coaly shale about $\frac{3}{16}$-inch deep, and then the intervening pieces are split off, and in this way a good deal of power is saved than if all the material was to be cut.

Digitized by Google

When the tools are blunt the cutter bar is removed and a new one put in. The blunt tools are driven out and taken to the bank to be ground up on an emery wheel. The motors are enclosed, as the machines are likely at any moment to strike blowers.

All the gearing is also enclosed to keep out dirt and dust.

The average production of coal per employé in the Pennsylvania coal fields is more than 1½ times the amount raised by the average English or Scotch colliers, and the *Colliery Guardian*, August 28th, 1891, suggests that this may be due to the greater average depth of the seams and to the large amount of coal-cutting machinery employed. It may be interesting, therefore, to note one or two of the machines made in that country.

The Jeffrey Electric Coal-Cutting machine consists of a bedplate 2 feet wide by 8 feet 6 inches long, composed of two steel channel bars, firmly braced, the top plates on each being racks with their teeth downwards, into which the feed wheels of the sliding frame engage. Mounted on this bed frame is a sliding frame, similarly braced, consisting mainly of two bars, mounted on the rear ends of which is an electric motor. The power is transmitted through straight gear and worm wheel to the rack. On the front of sliding frame is mounted the cutter bar, held firmly by two solid shoes. The cutter bar contains steel bits, held in place by a set screws, and when running these cutters cover the entire face. The cutter bar is revolved by an endless link chain from the driving shaft. The motor will develop 15 H.P. and cut 5 feet into the coal. It is moved forward about 42 inches at a time, and the makers say it will do 6 cwts., or about 12 square yards, in an hour in hard coal.

The Van Depeole Coal Mining machine or borer consists of a series of drills placed side by side and driven through pinion gearing by an electric motor fixed in the rear of the machine. It is fed forward by two screws at the back, and is provided with an apron and scrapers underneath to clear away the borings. (See Fig. 11.)

Messrs Goolden & Co. are now building for the Woodfield Syndicate coal-cutting machines of improved design, the "Turn-table," which can be arranged to cut either right or left hand,

Digitized by Google

carries part of the gearing and the cutter bar. It is detachable from the motor part of the machine, and can be run along on wheels by itself. All the principal parts, including the magnets, are of cast-steel, so that there is a maximum of strength in the space taken up. It is arranged to pull itself along the roadway. The motor takes about 12 H.P.

Mr Ravenshaw found, by employing steel having a large amount of hysteresis, that when the machine is put on open circuit the speed is much lower than if the machine had been built with wrought-iron field magnets.

The speed on open circuit can be very greatly reduced by employing a switch so arranged that up to half load the field magnet coils should be in series with each, and when above half load in parallel.

CONSTRUCTIONAL DETAILS OF DYNAMOS AND MOTORS.

The motor should be built to work under severe conditions. There should be no delicate mechanism, as they will be handled by men who know nothing of delicate adjustments, and they should be designed large enough so as not to have to do an excessive amount of work, and then with proper care sparking at the commutator will not take place.

The armoured method of armature building is to wind the wire into deep notches on the periphery of the core, and then cover with a layer of annealed iron wire. In this way the air space and copper in the field magnets can be reduced, and the armature can be roughly handled and laid on the ground without receiving injury.

The Gramme form of armature is the best for mining work, the wire being positively driven by numerous fibre keys let into the periphery, and the wire is wound in tight. By this means any movement which would in time chafe off the insulation and cause a short circuit is effectually prevented.

Fig. 12 shows the forms of magnets most often used, the single coil form, with cast-iron pole pieces, being perhaps the simplest. The single horse shoe with two magnet coils is very often used; but the Manchester type adjusts itself best to mining machinery. It

Digitized by Google

lies very squat in the bearings, being low down, and is very suitable where there is little head room. The one with the four magnet coils is peculiar to the Compton machines, and the mult-polar shape suits best for machines of 100 or 200 or more H.P.

All surfaces where there is a likelihood of leakage should be insulated with mica, as it is practically the only insulation to be depended upon. It is also advantageous to cover fibre surfaces with mica.

Copper plated carbons are now coming into use as collectors. Being pressed on to the commutator in a radial direction there is no lead, and they are admirably adapted for motors where the direction of rotation is reversed occasionally.

Where the direction is in one constant direction, as with dynamos, it is found advantageous not to cut the brushes square at the ends, but at an angle of about 60°, and the machine being rotated so as to lift the brushes.

The noticeable features about carbon brushes is that there is practically no lead, and in consequence the characteristic of a shunt wound machine is considerably improved, the cross magnetisation being considerably decreased.

In the Electric Power and Traction Company's brush carrier and holder, the brushes are carried in an adjustable holder, and are pressed on to the commutator by spiral springs at the back. This Company also make a good many of their motors with double commutators, thus increasing the width of the sections which are coupled up alternately. Messrs Goolden's brush-holder has an adjustable barrel spring and finger which presses directly on the top of the brush, the connections being sweated on.

Several examples of the new motor were to be seen at Frankfort. They are worked on a system of alternate currents of several phases called Drehstrom.

The currents are led to the magnets which are stationary; the rotary current revolves as it were, and induces the current on the armature which need have no connections.

The principal objection that has been raised is that it does not

Digitized by Google

exert sufficient torque at starting. A three phaser at work in the Frankfort Exhibition, which may be taken as the latest and most improved of its kind, was at work driving a rotary pump, which, of course, gave it a good chance to get up its speed before doing any work.

The torque of the three phaser only amounts to 1·6 of the normal torque, the collector (not commutator), and the brushes of this machine were for the purpose of putting in some resistance which would decrease the cross magnetisation. As soon as the machine has got fairly going the brushes are not required, there is no sparking. If a simple alternate current or multi-phaser motor can be made to work without brushes and collector, and to start with full load, there is no doubt a great future before it. We learn from the *Electrical Age* of New York that eight Michaels coal-cutting machines, each fitted with a Tesla alternating current motor, have been set to work at Bunola, in America.

The great advantage of the system is that it lends itself so well to transformation, although it may be said on the other side that pressures above 800 volts would be out of the question in damp mines.

The series wound machines are very convenient for underground work, because in the event of the motor being stopped, there is no danger of receiving a shock in handling the cables or machinery, and also on account of being able to stop the machine easily and without spark.

By putting a resistance of small self-induction across the ends of the dynamo field magnet coils (Fig. 13, Plate IV.), a path is provided for the current in the coils to discharge through when the main circuit is broken. The series machines are also very suitable for high voltage, requiring comparatively few turns of wire on the field magnets.

Shunt wound dynamos and motors have the advantage that the self-induction of the circuit is small, and the magnet coils have always the path of discharge through the armature which is equivalent to a small self-induction resistance.

Digitized by Google

In order to prevent leakage or short circuit in the field magnet coils, the fall of potential, through which may be considerable, the wire should be wound in sections between each of which is a sheet of fibre and mica, as shown in Fig. 14.

Fig. 14 also shows the method of regulating the potential in a shunt wound dynamo. An adjustable resistance is put in the magnet circuit, and by moving the switch over the contacts, the exciting current can be adjusted to a nicety.

Fig. 14 also gives a method of starting a shunt motor slow; when the switch is moved from the "off" on to the first contact, the machine commences running, but owing to the resistance which is in the main circuit, the current through the armature is small, and it starts off slowly, the switch is then moved slowly over the other contacts, and the resistance cut out of the main circuit and put into the shunt circuit, where it has no effect, because the shunt windings have been made allowing for this resistance being in when running at the normal speed.

A shunt or compound wound dynamo on the bank and a series wound motor in the pit is a good arrangement, but the best arrangement in large installations is to have separately excited dynamos, an adjustable resistance being put in the exciting circuit.

WIRING.

The wires should be put up in such a manner as to be readily accessible.

With high potential circuits, say 600 or 700 volts, it is necessary to use a high-class insulated cable, especially in wet places. If the wires are laid underground, which is no doubt the best place to put them, they are provided with junction boxes at intervals. Old wire ropes should not be used; cheap and what might be called economically reckless line work leads to endless trouble. The use of a soldering iron is out of the question in most coal mines, but there are several efficient ways of making a joint without its aid.

A junction box or screw connection may be used, or a corrugated fitting in which the two wires are laid side by side and then twisted

Digitized by Google

over each other several times. (Fig. 15.) The taper ending fitting is very good. The wires having been pushed through the ends and out of the middle, they are then bent back on themselves and pulled tight, the intervening space being filled in; and again, the solder may be melted in a crucible by a small oil lamp, the flame being protected in the same way as with the wire gauze safety lamp.

The using of old wire ropes in collieries is very tempting, but the danger from short circuits is so much increased that it is unadvisable to bring them in. The current may, however, with safety be taken to the machine with an insulated cable, the return being made with a separate bare wire.

Lead covered cables seem to be very suitable in damp situations, and they should as a rule be used in the pit shaft, where it is also advisable to cover with wood casing so as to protect from falling stone. Armoured cables are now being made by the Fowler Waring Company, etc., which would require a very great stress to break them.

The size of the cables in electric transmission is an important item, forming as it does a good part of the total cost.

The wires necessary for any particular installation depend upon the distance and the loss due to the resistance which may be allowed. It is, however, usual for a distance of 1 to 3 miles to allow from 7 to 10 per cent. loss, but a great deal depends upon who is having the plant put down; one mine owner does not mind the efficiency being low so long as the first cost is not very great; another asks for efficiencies of 70 or 80 per cent., and of course has to pay for it at first, but reaps the advantage afterwards.

A moderate outlay, however, will give an efficiency of about 65 per cent., and this seems to suit most requirements.

SWITCHES.

The switches which are required are enclosed in gas-tight covers. The following is a description of one made by Messrs Goolden & Co. It is a double pole switch, arranged for a series wound motor, has a number of contacts, between each pair of which are a series of increasing resistances, which carry the current as the switch is

Digitized by Google

being slowly moved over the contacts. In this way the magnetising current is diminished until the series wound dynamo has ceased to excite itself, when the switch is put on to the magnet short circuit contact, and the main circuit broken without causing any spark. (See Fig. 8.)

There is really no reason why the switch should be in the mine at all; it might very well be on the bank, with a signalling apparatus between it and the motor; or it could be put in an intermediate position, nearer the pit shaft than the machine, so that in the event of the ordinary safety lamp giving signs of a sudden increase of gas, the men would be able in retiring to stop the machine. In the event of its being left, however, the gas would only be able to leak in very slowly, and the current would be shut off at the bank long before it became explosive.

It may be interesting to note another method of destroying sparking. It consists of breaking the circuit through several voltameters arranged in series, and containing faintly acidulated water—they are in fact large capacity condensers.

TESTS.

First as to compressed air plant efficiencies.

In compressed air transmission it is found the heat waste is a minimum when the compression is performed isothermally.

Isothermal compression, it appears, is next to an impossibility. Professor Elliott has, however, shown that by having multiple cylinder compression and intermediate cooling, the expansion line of the motor can be made to hug the isothermal curve. He can therefore get a maximum economy by using triple and quadruple compressors and motors.

The following table was made out assuming a pressure of 6 atmospheres absolute, the losses being allowed on the same scale as Professor Kennedy found them to exist in the Paris installation over a distance of 4 miles.

$$\frac{\text{I.H.P. of motor cylinder}}{\text{I.H.P. of steam cylinder compressor engine}}$$

Digitized by Google

	Efficiency per cent.
Simple compressor and simple motor, - -	39·1
Compound „ „ - -	44·9
„ „ compound „ - -	50·7
Triple „ triple „ -	55·3

Messrs J. Fowler & Co.'s tests with compressed air gave efficiencies $\left(\frac{\text{B.H.P. of motor}}{\text{I.H.P. of comp. engine}}\right)$ as 25·8 per cent. with 40 lbs. pressure, and 45·8 with 19 lbs. pressure.

Professor Kennedy's tests, made in Paris, showed the efficiency $\left(\frac{\text{B.H.P. of motor}}{\text{B.H.P. of comp. engine}}\right)$ with a 10 H.P. motor was 31 per cent. if the air was not heated, and 45 per cent. if it was heated, before passing into the motor.

In a series of tests, made with 34 motors worked with compressed air, at Birmingham, with the pressure about 60 lbs. absolute, the air being used expansively, and in some cases heated, the average efficiency came out as 42·66 per cent.

All the above tests were made above ground, and in most cases the air was heated before being used in the motor. They are, therefore, hardly comparable with following results of electrical transmission, which were made with the machinery *in situ*.

The losses in electrical transmission are in the dynamo and motor, and in the mains. The loss in the dynamos and motors, as they are now built, need not be more than 10 per cent.; in many of the larger machines of upwards of 50 H.P. efficiencies of 93 and 95 per cent. can be got. The motor is generally not quite so efficient as the dynamo, more attention being given to strength and constructional details. The loss in the conductor need not be more than 10 per cent. or 12 per cent., but of course it can be almost anything, the practical limit in one direction being E.M.F., which must not be dangerous to life, and must be suited to the insulating materials which we at present know of; and in the other direction is limited by the cost and size of the conductor.

The statement, therefore, one often hears "that it is best to wait

Digitized by Google

for further developments," hardly applies, because the machinery cannot well be made more efficient.

From the above total losses these can be kept within 35 per cent., and plants are running where the losses are within 25 per cent.—that is to say, have an efficiency $\left(\frac{\text{B.H.P. of motor}}{\text{B.H.P. of generator}}\right)$ of 75 per cent.

A test made with the pumping plant in operation at the Trafalgar Colliery, where about 20 H.P. was transmitted a distance of nearly 2000 yards, the efficiency showed nearly 40 per cent. This plant was put down about five years ago, belts being used to drive the pumps.

The efficiency $\left(\frac{\text{B.H.P. of motor}}{\text{I.H.P. of engine}}\right)$ of the pumping and hauling plants at St. John's Colliery, Normanton, when first tested, gave 43·1 per cent. This has now been increased, by putting in larger delivery pipes, to nearly 50 per cent., the compressed air system, which was replaced, giving an efficiency of only 14 per cent.

At the Llanerch Colliery, Monmouthshire, the hauling plant gives an efficiency $\left(\frac{\text{B.H.P. of motor}}{\text{I.H.P. of engine}}\right)$ of 48·5 per cent., the distance of transmission being about 1000 yards, and the power about 26 H.P.

A test of a continuous hauling plant at the West Cannock Collieries, Staffordshire, gave an efficiency $\left(\frac{\text{B.H.P. of motor}}{\text{B.H.P. of engine}}\right)$ of 71·3 per cent. The tests were made directly after the machinery was started. The road being in an incomplete condition, better results will no doubt be got when the machine has settled down to its work.

Messrs Crompton & Co. have recently put down a main and tail hauling machine at the Abercanaird Colliery, South Wales. About 50 H.P. is transmitted a distance of 3200 yards. Mr Howell found the efficiency $\left(\frac{\text{B.H.P. of motor}}{\text{I.H.P. of generator}}\right)$ to be about 66 per cent., which means the efficiency $\left(\frac{\text{B.H.P. of motor}}{\text{B.H.P. of generator}}\right)$ will be more than 70 per cent. This plant replaces about 27 horses, and enables the output to be increased by 100 tons a day.

Digitized by Google

The tests of a pumping plant in operation at All-hallows Colliery, near Carlisle, where about 17 H.P. was transmitted a distance of 1200 yards, showed an efficiency $\left(\frac{\text{B.H.P. of motor}}{\text{B.H.P. of generator}}\right)$ of 76·5 per cent. The power lost in the engine was a large proportion of the total, owing to the engine working with less than half its proper load. The efficiency will increase as the load increases, by the pump being put further down the dip.

In conclusion, the author wishes to express his thanks to the various firms who have lent the apparati or drawings, and to the several gentlemen who have helped him in preparing the paper and diagrams.

It was agreed to postpone the discussion of this paper till next general meeting.

The discussion on this paper took place on the 26th January, 1892.

Mr RALPH MOORE said he had read Mr Scott's paper with much pleasure, and had studied the various adaptations described by him. As a mining engineer he assured the author that mining men were only too glad to get new available agents to assist them, and he must not think that their hesitation to adopt anything new arose from too great attachment to old ways. Inventors are apt to be sanguine, and they must bear with the seeming hesitation which mining engineers look upon such a novel application. Premising that he knew almost nothing of the science of electricity, he thought he should best state what is necessary for auxiliary power in mining, and the points which seemed to him to be important in the application of electricity to mining, and especially coal mining. Granted that by this system at any point in the mine the miner will be able to utilise 50 per cent. of the power of a steam engine placed upon the surface, there are still many points about electricity which require special attention.

Digitized by Google

1. The danger of flame from the wires coming in contact, by imperfect insulation, from breakage, or from sparks from the dynamo. He had read over what the author had to say on this head, but as a mining engineer he would not undertake to introduce electricity into a colliery where the normal condition was such that safety lamps required to be used in it. This, however, would not apply to one half of the mines in the United Kingdom, so that there is still a great field.
2. The danger to workmen from coming in contact with exposed wires, or to any part of the arrangement whereby a shock would be dangerous to life or limb. Electricians should bear in mind that electricity is a science which mining men know little about, and more especially that all the workmen are more or less exposed to danger from this cause. Their efforts should be specially directed to this point; he did not think the precautions noted sufficiently meet the difficulty.
3. The speed of the motor, say 500 revolutions per minute. To apply this number of revolutions direct to any mining operation that he was acquainted with is impracticable. The speed in all colliery winding or locomotive work does not exceed 100 revolutions per minute, or in pumping water 15 revolutions per minute. In coal cutters the speed varies with the kind of machine used. In all the applications of electric machinery it will be necessary to use gearing or belting to reduce the speed. He noted the various applications proposed by the author, but he doubted if they were sufficiently advanced for ordinary application underground, and further attention should be directed to the point. He had seen one of Jeffrey's Coal Cutting Machines working by electricity in Virginia. There was a great deal of noise caused by the gearing and much sparking. If it can be applied direct for rock drills it is a great step in advance. If

Digitized by Google

the coal cutting machine of Messrs Goolden (referred to in page 94), where there is no gearing, can be successfully employed, there is no doubt many of them will be used where coal cutting machines are found to be a benefit.

At present the auxiliary powers used in mining operations are rope haulage, compressed air, and hydraulics. Rope haulage is extensively applied for haulage of tubs along roads, for self-acting inclines, and for dip workings. It is a very simple and cheap mode, and where it can be applied is not likely, in his opinion, to be replaced by any of the modes of haulage by electricity shown in the paper. Compressed air can be used in any part of a mine, and from 15 to 20 per cent. of the power of the steam engine on the surface is utilised. It can be employed to drive compressed air engines for pumping or winding, for driving rock drills, and is a very useful agent. One point in the use of compressed air which must be kept in mind, is that the exhaust air assists the ventilation. For example, in the long tunnels at present being made for the conveyance of Loch Katrine water to Glasgow, rock drills are used, and the exhaust air is nearly sufficient for ventilating the tunnel, and no brattice or other means for producing a current is needed, or, if there is any deficiency, some of the compressed air is allowed to escape. For ventilation of a coal mine, however, such an arrangement would be wholly inadequate. He merely mentioned the fact to show that compressed air has this advantage over electricity. In most cases also where compressed air is used, the necessary number of revolutions can be obtained without much or any gearing. The drawbacks are the small amount of useful effect, the leakage (more than the inconvenience) of pipe joints, the cost of piping, and the necessity for having an attendant at each machine. Gas engines are sometimes used, and are said to give useful results. He had not used them. Hydraulic arrangements for pumping water are very effective. In the case of Mr Joseph Moore's hydraulic arrangement for pumping water—mentioned by the author—which can be placed in any part of a mine, 68 per cent. of the power of the steam engine

Digitized by Google

placed at the surface can be utilised, and the pumps require no one in constant attendance, which is a very important matter. Hydraulic engines are also used, but the difficulty with them is that the waste of compressed water is the same whether there is a load on or not; thus, in Sir William Armstrong's hydraulic cranes there is the same waste of water in raising the empty chain as there is when the load is attached. He did not give these instances for the purpose of throwing cold water on the introduction of electricity, but merely to point out what is done already, and if electricity can be supplied at a cheaper rate, and freed from the objections noted, there can be no doubt of its extensive adoption. He had not spoken of its usefulness in lighting pitheads; he agreed with the author in these applications, and thought it might be still further applied if it be cheaply applied. He might mention what to him appears one of the most important uses, and that is a substitute for the common miner's lamp. Hitherto the efforts in this direction have been mainly with the view of using it as a safety lamp to be used in mines giving off gas, and he had seen many of these besides that referred to by the author in the paper, but he would like to see it made available for use in all mines, whether fiery or not. What is wanted is an instrument not over 2 lbs. in weight or 3 inches square, or 3 inches by 4, with a light equal to say one or two candles, which can be relied on to give a light of that intensity for 12 hours, at a penny per day, the cost of an open light, and which could be made at a cost of 10s or 15s. If such a lamp could be got, he had no doubt it would be used universally in mines, whether fiery or not. It would also be used in dwelling houses in towns, for if the lamp could be readily recharged, doubtless depots would be established where this could be done at little cost. He desired again to say that he trusted the inventors would take these remarks in good part, and continue their efforts to bring electricity to the front in mining.

Mr Ormiston, on being called upon, said he had nothing to add to what his friend Mr Moore had said on the subject.

Mr Mavor said there were one or two things in this paper that

Digitized by Google

he would like to notice. First of all, the risk of fire from the electric wires in the pit—that is an undoubted difficulty that electricians have to contend with, no matter how the wires are placed. If a fall of roof takes place there is a risk of fire, and the only method that occurred to him is to use the current at such a pressure that there will not be a dangerous spark caused in the event of breakage. Now, that can only conveniently be done with alternating currents, and he was not aware that there was any method, so far, of utilising its alternating current by motors of such a kind as could be used under ground; and until they get that, the loss in continuous currents prevents the getting over the difficulty in that way. At the same time, it seemed to him that there is risk of sparks caused by the falling materials themselves. If the falling stone or other material is hard, it is just as likely to set fire to the gases as a spark from the electric wires, because such a spark could not exist very long. It would be instantaneous, and though there is no doubt that it would set fire to explosive gas, the small friction of two stones together would probably do the same thing. But as Mr Moore has said, there is a very large field for application in non-fiery mines, where the risk of fire from a spark caused by breaking the wire does not come in. Apart from the breaking of the wire, it did not seem to him that there is any danger at all of fire taking place. With regard to the risk of shock, that, he thought, with some experience of using electricity, mining engineers would cease to regard as a serious matter at all. The wires can be put out of reach if they are bare, so that they may not be touched. There is much less danger in touching the wires than in being knocked down by hutches. Every additional risk makes the miner's life more perilous, but the risk of shock from the wires is not a serious one. In ninety-nine cases out of a hundred, the pressure is under 500 volts, and though it is a very disagreeable shock to get, it is not likely to prove seriously injurious to any one. With regard to the speed of driving pumps, it is quite true that it is not very easy to make a cheap motor to run below 500 revolutions per minute. It is a mere question of expense, and as we gain experience,

Digitized by Google

and cheapen the methods of winding, they would be able to produce cheap motors to run below 500. In fact, there are many running at 250, which means that the gearing is not required for 500. Mr Moore speaks of mining pumps at 900, but it had been found advisable to use the three throw pumps, which are run at high powers, from 30 to 36 revolutions, and that is usually done with two kinds of gearing. It does not make a clumsy arrangement. The two are mounted on a bed plate, and drive the pump. The only rock drill that he had seen was in America, and the only one that was really successful was the one by Van Depeole. It was a reciprocating drill, and had been brought about by the reversal of the current in two coils, and they simply sucked the drill up and down alternately. It seemed to be a very efficient tool, and he did not know of anything that could beat it in utility. The miner's lamp is very important, but it does not look as if, with our present appliances, they could approach the cheapness which Mr Moore has indicated.

Mr M'WHIRTER said that he was disappointed with the paper, as details of much useful work done by "Snell" and others had been left out, which certainly ought to have been included if the paper was intended (as its title implies) to treat of the subject generally. The danger from fire no doubt requires very careful consideration, and he was afraid would not be attained by such means as enclosing the commutators, etc., by tight fitting covers, in fact these are sure to give rise to very serious trouble from the difficulty of giving proper attention to the brushes, etc. In conjunction with Mr F. J. Rowan, he had designed an arrangement to meet this where the motor is inclosed completely in a metal case, and where by means of electrolysis, an inert gas is given off in any quantity as required, so that there is no danger of any inflammable gas finding its way into the motor. The brushes can be adjusted from the outside, and a small incandescent lamp inside the cover enables the working of motor at all times to be observed through windows provided for that purpose. This arrangement has the further advantage of allowing more work to be taken out of motors without any danger

Digitized by Google

of overheating, and our whole arrangement of joints, etc., are so constructed that the cover can be removed and replaced inside of one minute. The machines cannot again be set to work before the cover is replaced. Although it is well to show mining engineers that they were prepared to meet these requirements in every way, yet some very long time must elapse before motors will be allowed in fiery mines, and as there is plenty of work to be done when these dangers are not present, and when all the experience necessary can be gained to meet the former case, attention should be given to the more general needs of the mining community. The heading of shocks is very *suggestive*, and when Mr Scott assures them that there is no danger from 700 volts, he would like to ask if Mr Scott had ever worked at 700 volts in the damp and dirty surroundings of a mine, and if so, would he give them an exact account of the pleasant sensations produced by occasional contacts with the circuit at the above pressure? He could easily understand miners being rather chary about using electrical apparatus at 700 volts; it is all very well to talk about efficiencies, but let them first of all be practical. If it has taken *electrical engineers* about 16 years to talk so glibly about high pressures, surely it would be more prudent to commence in mining work (at least when the apparatus requires much handling) with fairly low pressures of say 200 to 250 volts, by this means *miners* would gradually become accustomed to the use of electrical plant, and it would not run any risk of being condemned solely for want of the necessary attention. Too much stress cannot be laid upon the need for making all mining plant with extra care; it should all be able to stand much more than its normal output. He was afraid the use of such composite teeth as fibre and iron is very doubtful; however, this is likely to be fully met by the use of compressed leather for teeth; this, he was informed, wears well and makes a very quiet drive. He did not think there could be any two opinions about the use of electricity for firing explosives, and it has been long in use and largely taken advantage of here in Scotland. Electric bells have been in use in the West of Scotland for over twenty years, and now telephones are being largely put down.

Digitized by Google

The adoption of the electric safety lamp is much to be desired, but until the accumulator is further improved, as regards durability, they are not likely to be largely used. In paragraph 6, page 88, Mr Scott speaks about the attendant at the hauling and winding machine sitting on an insulated table. Could anything more forcibly show the mistake of using very high pressures? He believed that electricity would soon be used very extensively for this purpose; but he did not think the method of motor moving along a rope has come to stay. In America, the simple overhead wires, with motor geared to the axles, does everything required. Pumps should be made very strong, and having a large margin over what is intended to be taken out of them. The pumps which he had seen put down by English firms, to be driven electrically, are, as a rule, much too light; they are certainly not made in accordance with the ideas of Scotch mining engineers, and when working, they invariably show signs of being unduly strained. The question of drills has received considerable attention, and there are already several very good forms in the market. He did not think the Van Depeole percussion drill likely to be adopted to any extent here, as it requires special arrangement of dynamo and leads to work it, the same results can, and has been, attained by means of a rotary motor. He was informed that the various forms of coal cutters are comparatively old, and have not, up to the present, been found to meet the variable conditions under which coal cutting must be carried out, *e.g.*, in the bar cutter it is well known that the cutter bar has a very strong tendency to move either up or down (depending upon the direction of rotation) in the cut, this would be avoided, to a large extent, by the use of two bars rotating in opposite directions, and each cutting only half the depth of the cut. The Jeffrey coal cutting machine is well known in this country, but not favourably. It is quite evident that the use of field magnets of steel, having a comparatively low permeability and high retentivity, would assist in keeping down the speed of series wound motors when running light, but these would also reduce the activity of such motors, and for a given output, larger and heavier machines

Digitized by Google

would be required. Shunt wound motors would give much more regular speed and maintain the output. The method of armature construction, called by Mr Scott armoured, had been in use for the last five years. It is the old Paccinotti armature wound over with iron wire, and is an excellent plan for reducing eddy currents in this armature. He had one running for the last five years, at Gordon's College, Aberdeen; it is, however, rather prone to over heating of the armature conductors, and to consequent short circuiting between one layer and another. For mining work, nothing equals the modern gramme armature, when sufficient care is taken in construction. Mr Scott, speaking of alternate current motors, says that "above 800 volts would be out of the question." Why stop at 800? Surely not from the danger to life? as alternating currents at 800 volts are much lighter than could be handled with safety; in fact the Board of Trade places a limit at 300 volts when entering buildings. If Mr Scott can give some authentic tests of the efficiencies of the various forms of energy used in mining, it would be very acceptable, and if Mr Ralph Moore would say what his pump can do, it would be a useful addition to this paper. All wiring, without exception, used in mining work, should be of very high quality, as nothing else will stand the conditions under which it is placed.

Mr F. J. ROWAN said it was difficult to discuss the paper because of its general character, and the absence of details of machinery, such as other papers contained. On the whole, it is a fairly good one, but he thought it would have added to the interest and the value of it if Mr Scott had referred to work that had been done by others in the same direction, because there had been for the last five years a good deal of work done, and a good many papers had been published of interest to mining engineers, dealing with the subject from their point of view. The value of a paper of this sort is no doubt increased if the members of the Institution are able without difficulty to refer to these other papers. He should like to suggest, for the consideration of mining engineers, that the supposed danger from fire is really made a little too much

Digitized by Google

of. The sparking at the commutators looks dreadful to a miner, but all experiments that have been made by running dynamos in an explosive mixture of gases, with the view of determining whether there is any great danger from the ignition of fire-damp, or the explosive mixture of fire-damp and air, have proved that it is extremely difficult to produce an explosion from that cause. There are several methods which have been proposed for making the sparking not only harmless, but rendering the chance of explosion almost impossible. Messrs Goolden have one, and he thought Immisch's firm proposed another. He had proposed one some years before the one that Mr M'Whirter referred to in his first paper on "The Application of Electricity to Mining Operations," read to the Mining Inst. of Scotland in 1887, when he proposed to practically enclose the commutator in the gauze of a safety lamp, and that was taken up afterwards by Blackburn, who was the first to introduce that rotary coal cutter which Mr Goolden has improved. Then Messrs Goolden proposed enclosing their motors in an air tight case. The method that Mr M'Whirter and himself had been working at is another simple alternative, namely the making use of a part of the current to cause the decomposition of certain chemical substances which give off carbonic acid only when the current is passing, and a very small quantity of carbonic acid present, even in an explosive mixture, prevents all possibility of explosion. Now, the other supposed source of danger from fire, is the spark, or flash, caused by the cutting of the cables in the event of a fall of roof. I do not refer to a fall of coal, because the cables would in no case be sufficiently near to the working face to cause any danger from that source, but along the roads of mines there is apparently some danger if a fall of roof takes place. The danger from a spark caused by the cutting of the cable would, however, be a very small affair compared with the danger from the falling of the roof; and besides that, it would be necessary, in order to produce fire, that not only should the cutting of the cable and the spark be produced there, but that the explosive mixture of gases should also be present at that particular spot. It might happen once in a

Digitized by Google

hundred years, but if the ventilation of mines is carried out as efficiently as it is now, he thought it extremely unlikely that an explosive mixture would be found at the same place where the roof came down. He hoped, therefore, that mining engineers would not be frightened by supposed dangers which, if they calmly considered the subject, seemed to be a good deal more remote than they were led to understand.

Professor JAMIESON said that not very long ago he had been requested to draw up a complete specification for an electrical pumping plant to be used in a shale mine, where the pumps and their electrical motor would have to follow the extracting of the shale at the natural angle of the seam (viz., 30 to 40 degrees from the horizontal), and at a mean rate of about 15 feet per week. The distance between the position of the dynamo generator and the electric motor to start with was 900 yards, and consequently this would require 1800 yards of main cable. The pumps were required to elevate 75 gallons of water per minute through some 600 feet of piping against a vertical head of 300 feet at not more than 30 revolutions per minute. Under such circumstances the motor and the pumps would have to be fitted to one portable frame, capable of being eased forward and downward as the working of the mine progressed. No other system of transmitting power could lend itself so well to such difficult circumstances. The flexibility of the leading wires, together with the ease by which additional lengths of insulated conductors could be added, as required, far surpassed the jointing on of additional lengths of pipes conveying steam, air, or water. In this specification he had stipulated the maximum pressure at the generator to be 300 volts, for he quite agreed with Mr M'Whirter that it was injudicious to use dangerously high pressures, since no set of rules or directions would prevent miners (either from inquisitiveness or by accident) coming into contact with some part of the conductor system. A miner, if standing on damp ground, would get a sufficiently severe shock with 300 volts to warn him and his fellow-workmen "not to try it on again." Fuel, as a rule, costs a minimum at such works, and consequently the matter

Digitized by Google

of efficiency does not bulk so largely as in a town installation. What is principally required for mines is a thoroughly strong lasting job that will give a minimum of trouble, and cause a minimum of expense for repairs. Both dynamo and motor, as well as the pumps, should be fitted with continuous automatic lubricating apparatus that will only require to be attended to once in 24 hours. Mr Scott says a good deal about the efficiency of machinery for transmitting power by air. If you take certain precautions, and have certain things at your disposal, then you can reach an efficiency of 80 per cent. for two miles with air, but that is not to be compared with the transmission of power by electricy, where 90 per cent. can be easily attained. He was only speaking of the loss during the transmission of power from the generators to the motors along the main conductor. In the experiments at Frankfort they had water turbines with dynamos at one end, and they had the three faze system with three wires a quarter of an inch in diameter, led 110 miles from the generator to a number of motors. These motors were able to give out 160 brake horse-power, and the nett efficiency of the whole system, including generator, aerial wires, and motors, was 71 per cent. He had made an experiment at Earnock Colliery along with Mr Gilchrist, the manager, in which they placed an electric lamp in a box containing explosive coal gas. The lamp was broken, and immediately an explosion occurred, so that simply the retentivity of the filament for heat was sufficient to explode the gas. There are plenty of mines where no danger exists from explosions. Would it not, therefore, be better for electrical engineers to push their appliances in the first instance in such safe places, leaving fiery mines alone? Mr Moore asked about the cost of maintaining the electric safety lamp, and nobody was able to give him the requisite information. If they could get a lamp which would cost about one-tenth of a penny per hour, every one would use it, but can Mr Moore not double his proposed weight and treble his charge for upkeep, then we might be able to supply him.

Mr MOORE—The cost now of safety lamps is a penny per day.

Professor JAMIESON—Within the next few years there would

Digitized by Google

be a great improvement in electric lighting and power transmission, and he had much pleasure in saying that Mr Scott's paper contained the latest information of what had been done in this line to the present time.

Mr MAYER—Perhaps Mr Moore would say if it is really the case that the safety lamp, as at present made and used, can give out light of two candle power for twelve hours at a penny ?

Mr MOORE—I did not say two candles. I said that a safety lamp, used as at present, can be kept for a day of twelve hours at a penny.

Mr ROWAN—What is the amount of light given ?

Mr MOORE—I don't think it gives one candle. His reason for mentioning two candles was that in the lamps he had seen they had gone to the other side and given five or six candles, and far more than wanted. One candle would be perfectly sufficient, but it is evident to everyone, that unless it can be made reasonably cheap, it would not be used.

Mr MAYER asked if in the experiment which Professor Jamieson mentioned as taking place at Earnock Colliery, and at which he happened to be present, the lamp in that case broke, and the white light of the carbon filament became exposed to the explosive gas. Was the temperature of the sparking of a dynamo or motor of equal intensity with the white light of the carbon filament, because in the one case there was an explosion, and would it be likely that an explosion would occur in the other case from a mixture of fire damp and atmospheric air ?

Mr ROWAN—The two cases are not in any degree parallel. The result obtained by Professor Jamieson has been also obtained in some exceptional cases. A number of experiments was made by Mr Mordey, whose name is well known among electrical engineers, and he found that when he broke incandescent lamps in an explosive mixture of gases, it was only with some difficulty that an explosion was caused. In the case of incandescent lamps there is a filament of carbon at a very high temperature indeed, which is of sufficient length and section to retain heat for some

Digitized by Google

moments after the current has been cut off. In the case of sparking, the spark is passing momentarily between the brush and the surface of the commutator, and in order to ignite gas it would be necessary to pass it through the gas. Now the layer of gas that could exist between the surface of the commutator and the brush would be so small that he did not think it would be possible to ignite it, and still less to ignite by it the surrounding atmosphere. The spark itself is not of the same temperature as that of the carbon in the incandescent lamp, otherwise brushes and commutators would not last as they do.

The PRESIDENT said if there were no other remarks this discussion might now be closed. Mr Scott's paper had been a very interesting one, and of great interest to him, and he thought the paper would be of much profit to the Institution, as it had been productive of considerable discussion. With regard to electricity in mining, they all knew that the lamp the collier uses is a very inefficient light altogether, and that when he has a Davy lamp in a fiery mine it is a great deal worse. He should say that a man who is working with a very poor light and working practically in the dark, cannot produce anything like the same amount of work that he could do if he were working with a more efficient light. A man working in the open air above ground with the sunlight, will produce a much better day's work than he will working during the night, even with a good artificial light, and he thought the same thing would obtain down in a mine, and that although colliers have been accustomed to work practically in the dark, they will be able to produce very much better results and produce more coal, and in a much shorter time, if they had more efficient lights under ground. With these few remarks, he would now propose a very hearty vote of thanks to Mr Scott for his paper.

The vote was cordially awarded.

Digitized by Google

Note received from Mr Ernest Scott 10th March, 1892.

In the following table the top line of figures are the requirements of electric safety lamps as suggested by Mr Moore, and the second line the dimensions, etc., of a lamp such as the one he (Mr Scott) exhibited, only with a protection of teak half-an-inch thick. He had taken the selling price as 17s 6d in the first line, which allows a profit on the figures Mr Moore gave :—

Weight. lbs.	Dimensions. inches.	Light. candles.	Duration. hours.	Cost. per day.	Price.
About 2	3 × 3	1 or 2	12	1d	17s 6d
„ 3½	3 × 3	2	12	¾d	35s

Seeing that there is a saving of at least ¼d per day, an easy calculation will show that before the end of the third year the Bristol lamp will have made up for the extra first cost; the small extra weight is insignificant.

Accumulators, and therefore the lamps, are not likely to be made much smaller than they are at present for the same output, seeing that the ordinary storage battery is, if anything, larger now than it was made five years ago.

With regard to the experiment, mentioned by Professor Jamieson, of gas being exploded by the heat retained in the filament of a broken incandescent lamp, he might state that the bull's-eye of the lamp exhibited was ¼-inch thick, and would therefore require a very great stress to break it. Also, the little incandescent lamp is hung on hook terminals, so arranged that the lamp is much nearer the glass than the reflector; the slightest pressure on the lamp will make it slide off the hooks and break the connection.

For ordinary incandescent lighting, he thought the danger would be almost entirely eliminated by providing each lamp with a substantial wire guard, and employing a well regulated engine and dynamo.

Digitized by Google

In reply to the first few sentences in Mr M'Whirter's remarks, all he could say was that he tried to be impartial. Mr A. T. Snell declined to give him information.

In paragraph No. 2, Mr Moore raises the question of shocks, and later on in the discussion Mr M'Whirter asks if he had ever worked in the damp and dirty surroundings of a mine where a pressure of 700 volts was employed. No; he was never so fortunate, but he knew several persons who had received that voltage through their body under the conditions mentioned, and thought nothing of it.

A stationary insulated wire, with a working pressure of 700 volts, was, in his opinion, a much safer medium of transmission than a moving wire rope, a steam pipe, or a high pressure hydraulic main. Every method is dangerous if abused. Mining engineers and managers may rest assured that electrical engineers, at anyrate on this side of the Atlantic, will not recommend or put down an electric installation without making everything safe—that is, safe against anything but gross carelessness, *e.g.* The electric mains which intersect London, in all directions, are worked, in some instances, at thousands of volts and yet no one is injured; they are as safe as the gas and water mains, which run alongside them. From a customer's point of view the disadvantages of employing low voltages are the extra expense of cables, difficulty of their manipulation, and increased size and first cost of the machines.

When he said that pressure above 800 volts would be out of the question in *damp* mines, he meant that above that pressure the leakage and liability to short circuits might be greater than our present known insulation for wires would cope with. It is obviously to the contractor's advantage to make everything as harmless as possible, therefore, when he mentioned the fact that the man driving the winding machine should stand on an insulated table, he intended it as an additional safeguard; it can be done very cheaply, and might as well be taken advantage of, but most decidedly it is not absolutely necessary.

With regard to the tendency of the bar cutter coal mining machine to move either up or down the cut, he was afraid Mr

Digitized by Google

M'Whirter's suggestion of having two bars to the Goolden machine would necessitate great complication, and when accomplished it would be at a disadvantage because of the extra amount of small coal which would be made. In the latest form of this machine, now successfully at work in the collieries of Lord St. Oswald, at Nostel, near Wakefield, no trouble of this kind has been met with; at a suggestion of Mr Hurds the cutter bar is inclined forward as well as downward, the angle between the bar and the machine being less than 90°: in this way the screwing off action of the cutter bar is counteracted.

A disadvantage with all bar machines is that if they meet a sulphur ball or other hard lump, they have to chip their way through at the expense of time and cutter tools, where the wheel cutter machine would most probably pull it out whole.

An old form of machine is being revived by the Thomson-Houston Company, in which the cutter tools are fixed at intervals to an endless chain, mounted on a radial arm, which can be turned into the coal in much the same way as the Goolden cutter bar; it has the advantage of not moving vertically in the cut, of making very little slack, and of removing the same along with sulphur balls, etc., as the cutter tools pass outward; also, the wedges can be got in quite close to the working face. There is, however, the disadvantage of the numerous journals, pins, etc. (which require to be well lubricated) being situated in the cut amongst the dirt and dust.

Mr Wilson Hartnell, of Leeds, has suggested a similar arrangement to Messrs M'Whirter & Rowan's enclosed motor. He makes the box act as a yoke piece to the magnets, so that the machine is what is known as an "Ironclad." If an explosion occurs inside, the hot gases escape through several layers of wire gauze.

Several speakers mentioned the commercial multiphase, including alternate current motor. Doubtless its invention is the key to the very general adoption of the alternating current system, and its advent would be hailed with great satisfaction, but we have not got it as yet. He was afraid it threatened to be the bug-bear of the business. It seems to be somewhat analogous to the steam turbine

Digitized by Google

or high speed rotary engine, which every now and then crops up, threatening to demoralise the whole steam engine industry, but somehow or other it doesn't. The apparatus is admired for a time for its ingenuity, and then subsides, perhaps to be reinvented by some other unfortunate of the future.

The following particulars may be interesting.

Installation of Electric Winding Plant at the Sheba Gold Mines, Barberton, South Africa; all the Electrical details being supplied by the Brush Electrical Engineering Company, Limited, London :—

At the generating station there are two Victoria continuous current dynamos, separately excited by another smaller machine. They are driven by belting from two Hett turbines, and when on full load, running at 550 revolutions per minute, will generate a current of 40 amperes at a potential of 1400 volts. The machines being in series with each other, there is a difference of potential of 700 volts across each commutator. These commutators are of the ordinary form, except that the mica between each section is thicker than usual, and all ledges where copper dust can lodge are avoided.

The cables are attached to pot insulars slung on wooden poles, and carried to the motors about 5000 yards away, and the machines are designed large enough to do 50 per cent. more work than at full load. At the normal load the temperature on any part of the machine never rises to more than 70 degrees above that of the surrounding atmosphere.

The winding machine is made by Messrs Harvey & Co. of Hayle, and is driven, through a worm and worm wheel, by a single leather belt from two Victoria type motors coupled together, the pulley being placed between them. They run at 600 revolutions per minute, and absorb about 50 H.P. at full load.

The advantage of using the worm and worm wheel lies in the fact that belt driving (with its advantages of flexibility, little noise, and less stress and jar on the armatures of the motors than would be the case with gearing) can be used for transmitting the energy from

Digitized by Google

the motor to the winding machine, and yet the cage would be safe if the belt broke or came off, because the pressure of the teeth of the worm wheel is nearly at right angles to the direction of rotation of the worm, and it therefore locks itself.

The motors are series wound, and in series with each other, the direction of rotation being reversed by reversing the direction of the current through the armature; before the main switch is put over, however, the current is reduced to almost nothing by inserting resistances connected to an auxiliary or regulating switch. An important feature about the switch arrangements is that the lever attached to the main switch (for starting, stopping, and reversing) cannot be moved in any direction until all the resistances are in, and it is therefore impossible to have a destructive spark or arc.

The main switch is single pole fitted with brush contacts, the final break being made through a water contact or resistance, the plate which is lifted out of the water being connected through a pair of suitable gear wheels and crank with the main switch lever.

The regulating switch is fitted upon a marble slab. It is fitted with 52 contacts, each of which is connected up to the resistances in such a way that in moving off to the stopping position the fall of potential between each pair of points shall be about the same. The caps of these points are easily replaced when worn.

The whole system is protected by the Brush high tension fuses, which consist of a very fine copper wire fixed in a glass tube, the arc being prevented from travelling at each end by a highly refractory sand.

The fall of potential along the cable from dynamo to motor is about 340 volts, with full loads, and the efficiency,

$$\frac{\text{B.H.P. on dynamo belt}}{\text{B.H.P. on motor}}$$ amounts to about 60 per cent.

Digitized by Google

Digitized by Google

On Professor Wiborgh's Air Pyrometers.

By Mr JOHN CRUM.

Received 14th; Read 22nd December, 1891.

ACCURATE instruments for the measurements of high temperatures are much required at the present time, in the numberless cases where a "balance" is demanded between the amount of fuel burned and the work done by its combustion. This "account-keeping" has been applied to all kinds of furnaces and heat-engines, and is deemed as necessary there as in monetary matters. This demands a unit of temperature of equal value in measuring high or low temperatures.

The instruments used in measuring high temperatures have been termed pyrometers.

It would serve no purpose at present to mention the many sorts, or criticise the various instruments that have been applied to determine high temperatures. Most of these have passed out of use, and the position of the few that remain indicates that they are not equal to the requirements of modern practice.

Amongst the means used to measure high temperature, the following may be mentioned:—

Indications by the *colour* of the glowing body, and a scale of degrees is used corresponding to the colours. The figures are very uncertain when applied to a furnace or to a flame, and heat colours do not appear alike to different eyes, or even to the same eye at all times.

The *fusion of metals* affords a means of determining high temperatures, as the same metal always melts at the same temperature. The relative purity of the metals used, the conditions as to heating

Digitized by Google

per unit of time, of mass, &c., all tend to vitiate the results of this method. Approximate results between two degrees not widely apart have been obtained by definite metallic alloys. The metals used for high temperatures being silver, gold, or platinum, the cost of which forbid their general use.

Some useful pyrometers are based on the *method of mixtures*, or on the specific heat of hot metals dropped into water. A ball of platinum, copper, or iron, or other metal, is placed where the temperature is to be determined until it attains the same temperature. It is quickly sunk into a vessel containing a measured volume of water, and the increase of its temperature affords data by which to determine the temperature of the place where the metal ball was heated. These hydro-pyrometers are accurate measurers of temperature when the experiment is throughout made with the requisite care.

Captain Byström was the first to apply a serviceable instrument. The same sort is now in use as Siemens' hydro-pyrometer, because improved and manufactured by Sir W. Siemens' firm.

This form of pyrometer has been greatly improved by S. A. Andrée, and described in 1884. It is fitted for most metallurgical purposes. A modification of it was the instrument used in the classical researches by Professor Akerman on "The necessary heat required for fusion of the different blast furnace slags and silicates," published in 1886.

The draw-back to the use of the water-pyrometer is the difficulty in some places of heating the ball and quickly conveying the heated ball to the water without loss of heat. In high heats this loss is considerable, and increases with the temperature. The loss by oxidation and decrease of weight of the metallic ball can be corrected by weighing.

Many pyrometers are based upon the *expansion of solid bodies*, but all are found to be unreliable from the rate of expansion varying by prolonged use, and are at best only empirical.

Electrical Pyrometers.—High temperatures have been measured by difficultly fusible metals forming thermo-electrical couples. Bequerel

Digitized by Google

used palladium, Rossetti used iron and platinum wires. Sir William Siemens' electrical pyrometer is based upon the principle that the electrical resistance increases with the temperature. He measures the relative quantities of water decomposed in two voltameter tubes, one of which is inserted in each branch of a divided circuit of an electric current, one branch being heated in the place where the temperature is required to be determined.

Recently, Le Chatelier has introduced a high temperature pyrometer consisting of "a thermo-electric couple of platinum, and of platinum containing 10 per cent. of rhodium, and converting the indications of the galvanometer into temperatures by Professor Tait's formula."

I come lastly to pyrometers based upon the *expansion of air*. The celebrated experiments of Dalton, Gay Lussac, Rudberg, and Regnault had ascertained with great accuracy the co-efficient of expansion of air. Similar instruments to what they had made were used as air-thermometers, and those designed for high temperatures were called air pyrometers.

These instruments, while useful in the service of science, required great care and skill in their manipulation, and were inadequate for industrial requirements.

The co-efficient of expansion of air even at high temperatures being found constant, afforded the most accurate basis for the construction of a reliable pyrometer, and to Professor Wiborgh it seemed possible to give these air pyrometers a simple and practical form.

In constructing these pyrometers he followed two principles—first, that a certain quantity of air when heated is maintained at the same volume, and the increase of pressure gives a measure of the increased temperature; and second, that the air is maintained unaltered in pressure when the temperature is determined by the change of volume.

Digitized by Google

CONSTRUCTION OF THE PYROMETERS.

The two forms of Professor Wiborgh's air pyrometers may be compared to the two forms of the barometer—the mercurial and the aneroid.

The first we describe is that with a mercurial manometer. The chief parts being of glass, its construction and action can be better followed than in the aneroid which is enclosed in a metal case.

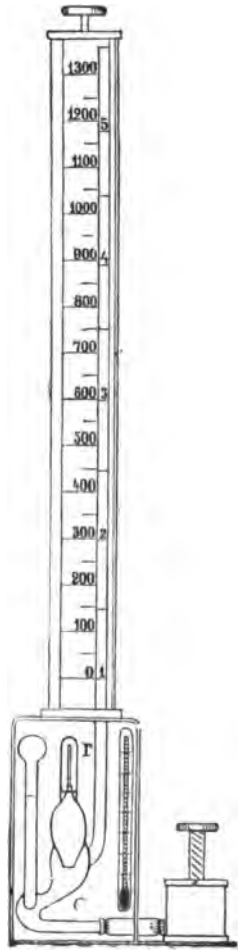

Fig. 1.

Digitized by Google

Fig. 1 shows this form of the instrument. The bulb and stem are made of porcelain. The volume of the bulb is about 40 cubic centimeters, the stem is about 20 m.m. outside diameter, while the inner diameter is less than half a m.m., and thus is a capillary tube. The open end is cemented into a brass cap, which screws firmly into the capillary passage leading to the manometer. To protect this porcelain tube from fracture, it should receive as a cover a wrought-iron tube with closed end, having a few holes to allow flame or gas easy access to the bulb. A conical ring shrunk on the iron secures a tight joint where introduced into hot blast, or into a strong draft. The bulb is covered with asbestos rope yarn, to protect the porcelain tube from fracture when suddenly introduced into a high temperature such as a flame.

The joint is screwed up firmly against a lead or leather washer, having a capillary passage continuing into the glass tube. To facilitate this connection, the instrument is provided with a screw coupling by which it is quickly connected and disconnected with the pressure-measuring portion of the instrument, even when the porcelain tubes are fixed into a furnace, or a flue, or hot-blast main. This arrangement allows the manometer to be removed from the dust and smoke into a safe place, and also that the same manometer may be used for several porcelain tubes fixed in different places where the temperature is to be determined. The brass tube into which the glass tube, *r*, is cemented, consists of a hand screw with thread, furnished with running coupling, and has a ring to prevent it slipping off the tube. When the parts are placed together and the coupling turned round, the point is pressed against the end of the tube, and an air-tight joint is made between the two parts of the instrument.

After an observation is made and the manometer removed, a small brass cap is screwed on instead, to exclude dust and moisture from the porcelain tube.

Before describing the scales and method of observation, a short explanation of the theory of the instrument may be given as published by Professor Wiborgh, in "Jern Kontorets Annaler."

Digitized by Google

The principle upon which the pyrometer is based is as follows :— The volume of air, V, in the porcelain bulb is allowed while in communication with the outer air to assume the temperature, T, which is to be determined, the communication is then cut off, and into this volume of hot air, V, another volume, V′, is introduced also under atmospheric pressure, H, and of the known temperature, t. The amount of pressure, h, arising from this operation is, of course, a measure of the temperature, T, and this is ascertained by means of the mercury manometer.

Before introducing the extra or second volume, you have: the volume of air, V, at the temperature, T, and the volume, V′, at the temperature, t, both at the atmospheric pressure, H.

After introducing the additional volume, there is only one volume of air, V, of the temperature, T, but under the pressure, H + h.

Reducing these volumes of air to 0°, the law of Boyle and Mariotte gives the following formula:

$$1.\quad \left(\frac{V}{1+\alpha T}+\frac{V'}{1+\alpha t}\right)H=\frac{V}{1+\alpha T}(H+h),\text{ hence}$$

$$2.\quad h=\frac{\frac{HV'}{1+\alpha t}}{\frac{V}{1+\alpha T}}$$

when the co-efficient of dilatation of the air is denoted by α.

If the volume of the capillary tubes and the expansion of the vessels are disregarded, the above formula is quite accurate.

From this is obtained:

$$3.\quad T=\frac{Vh-V'H}{V'\alpha H}+\frac{hV}{V'H}t,$$

which when $t = 0$ gives

$$4.\quad T=\frac{Vh-V'H}{V'\alpha H},$$

on which expression the temperature scale of the pyrometer is based. Again, if T is put = 0, the formula becomes

$$5.\quad h=\frac{V'}{V}H,$$

Digitized by Google

which again represents the zero-point of the scale, or more correctly the zero line, which varies with the barometer pressure, H.

When the temperature scale is made for $t = 0$, according to formula 4, it is seen from formula 3 that if t is not = 0, the temperature read from the scale must have $\frac{hV}{V'H}\,t°$ added to it, in order that the true temperature, T, may be obtained.

This expression may be written $\frac{ht}{\frac{V'H}{V}}$, which indicates that t must be multiplied by a factor, the numerator of which, h, is the height to which the mercury rises in the manometer tube in the temperature observation, and the denominator, $\frac{V'}{V}\,H$, according to equation 5, being the height of the mercury column which corresponds to the zero point of the instrument. Making this height the unit for graduation of the manometer tube, and marking on the tube the zero point with 1, and the upper parts with 2, 3, 4, as shown, a scale is obtained on which, at an observation, the height of the column of mercury gives directly the factor by which to multiply t.

As the height of the mercury for the zero point $\frac{V'}{V}\,H$, on which the scale is to be based, varies a little with the barometric pressure, but the scale must be made for a fixed atmospheric pressure, the correction will be quite exact only when the temperature observation is taken at that height of the barometer for which the scale was constructed. The error caused by the variation of barometric pressure is so insignificant that for all practical purposes it may be neglected. If, for example, the scale being made for a barometric pressure of 760 m.m., while the observation is taken at 790 m.m., when the temperature of the outer air is 20° C., and the temperature T = 1000°, the error caused by the scale not being made for a pressure of 790 mm. is only 5°.

From the above description it is seen how this scale of factors on the manometer tube should be used in determining a temperature, but to make it clear the following example is given:

Digitized by Google

Supposing the mercury is observed to rise to 800° on the temperature scale of the pyrometer, this shows also 3·5 on the scale of factors on the manometer tube, and also that the thermometer placed inside the instrument indicates 20°; then the temperature sought is

$$T = 800 + (3{\cdot}5 \times 20) = 870°.$$

THE CONSTRUCTION OF THE NEW AIR PYROMETER, OR THE ANEROID PYROMETER.

The pyrometer just described had for some purposes two disadvantages in its use in workshops, &c., which the inventor has sought to remove. Its construction being partly of glass, it was fragile, and the mercury in the open manometer tube became soiled with dust. While retaining the principle on which the former instrument is based, Professor Wiborgh has entirely reconstructed it. Figs. 2 and 3 show the new aneroid pyrometer.

The instrument is encased in a round brass case, with a strong bottom, *a* (Fig. 3), into which is firmly screwed the pyrometer tube, consisting of the porcelain bulb, V, and capillary tube, *r*. Within the case, and close to the bottom, *a*, is fixed a lens-shaped metal vessel, V', of such form and elasticity as to allow of its sides being pressed together quite flat, and of resuming its original shape. To the opposite side of this vessel is fixed a metal plate, *b*, with a cylindrical stem, *d*, through both of which the capillary tube, *r*, is continued. The lens-shaped vessel has also capillary openings on both sides corresponding to those passages, and the two volumes of air, V and V', are thus in communication with the outer air.

Digitized by Google

Fig. 2.

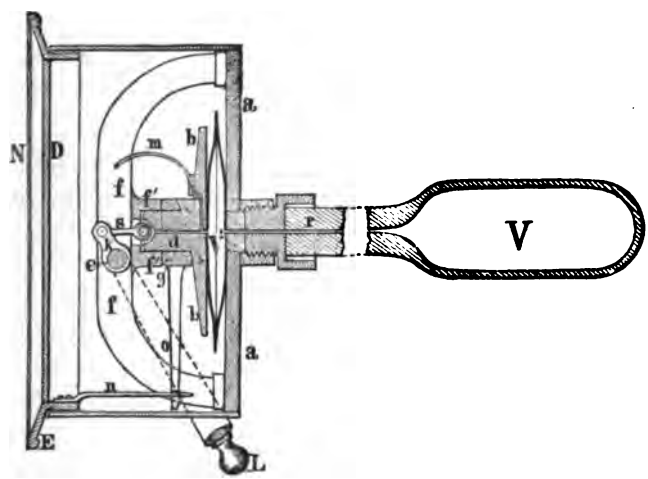

Fig. 3.

To the bottom, *a*, is screwed an iron bow or bridge, *f*, supporting an axis, *e*, by means of which the vessel, V', can be compressed. For this purpose the axis is provided with a short arm, *k*, actuating a short rod, *s*, which on turning the axis, is pushed downwards,

Digitized by Google

closing the capillary passage, and next pressing down the stem, *d*, with the plate, *b*, so as to press the lens-shaped vessel, V′ flat, and deliver all the volume of air it contained into the bulb, V, of the porcelain tube.

The action of the corresponding parts of the two pyrometers is the same, so that what has been seen in the mercurial instrument can be followed in the aneroid instrument.

In order to measure the amount of pressure after forcing the air of V′ into V, the capillary passage in the stem, *d*, is, by means of a fine lead tube, *m*, connected with a manometer spring which, in the usual way, by means of a spur wheel and toothed segment, transmits to the pointer, *z*, the motion of the spring caused by the increased pressure. This arrangement is shown in Fig. 2 by dotted lines. The lead tube, *m*, of course must be bent, and of sufficient length to allow of its inner end following the motion of the stem, *d*, when the vessel, V′, is compressed.

To allow the axis, *e*, to be turned, it is mounted in bearings in the sides of the case, and its projecting ends are connected by a forked-shaped lever, G, provided with a small handle, L. While no observation is being made, the volumes of air, V and V′, should communicate with the atmosphere; and to prevent the rod, *s*, from closing the capillary opening, a spiral spring wound round the axis, *e*, and fixed to the bridge, *f*, keeps the lever, G, in the position shown in Fig. 3. This spring is not shown in the figure.

By slightly compressing the vessel, V′, it may thus be made to contain a larger or smaller volume of air; there is, in this construction, a very simple means of obtaining a correction for the varying barometric pressure, as well as for the outer temperature. This will be seen in formula 2:

$$h = \frac{\frac{HV'}{1 + \alpha t}}{\frac{V}{1 + \alpha T}}$$

which holds good also for this new aneroid pyrometer, because if

Digitized by Google

the temperature scale of the pyrometer is made for $t = 0$—that is to say, according to the formula,

$$h = \frac{\frac{HV'}{V}}{1 + \alpha}$$

and the outer temperature changes to t^c, the volume of air to be pressed in has only to be increased to $V'(1 + \alpha t)$ to obtain the same value of h as if t had been = 0°.

The barometric pressure, H, on the other hand, acts in the opposite direction; thus, the more it increases, the smaller the volume V′ must be for the value of h to remain unchanged. As the temperature t and the barometric pressure H thus stand in a certain relation to each other, it is easily calculated that if the barometric pressure increases by 78 mm., the value of h being unchanged, the volume V′ must be as much reduced as if the temperature t had fallen 30°.

From this it will be understood that the same scale may be used for every outer temperature, and for every barometric pressure, provided that the volume V′ which is to be introduced is altered in a suitable manner.

To apply this method of correction in the aneroid instrument, the stem, *d*, is surrounded with a movable ring, *g*; the outer end surface is a plane, and by the elastic vessel, V′, is kept pressed against the shoulder, *f′*, of the bridge, *f*, while the other end is shaped like a screw-thread, and bears upon a corresponding screw-thread on the inner part of the stem next to the plate, *b*. On the ring, *g*, being turned, the plate, *b*, is raised or lowered, and an alteration is effected in the volume of the vessel, V′.

The turning of the ring, *g*, is done by means of the lid of the case, which consists of a large metal ring, E, containing the glass cover, N. To the rim is fixed a brass rod, *n*, with a forked end acting on another rod, *o*, connected to the ring, *g*, and by these rods the movement of the outer rim is transmitted to the inner ring.

On the dial plate, D, fixed to the bridge, *f*, is drawn the scale of the temperature of the pyrometer, also a smaller scale, to be used

Digitized by Google

for correction of the barometric pressure. This scale, showing different barometric pressures, is placed at the bottom edge of the dial, close to the ring, E.

The dial is also furnished with a thermometer, P, indicating the temperature, t, of the volume of air, V′, to be pressed into V, and also a small aneroid barometer, Q.

On the movable ring, E, there is also drawn a scale of temperatures for the correction of the temperature, t, and this scale must be graduated in such a manner that on the ring, E, being made to move a distance corresponding to the distance 0° to t° on the scale, the volume of the lens-shaped vessel at the same time will be increased from V′ to V′ $(1 + \alpha t)$.

The degrees of the barometer scale on the dial plate must also—as mentioned already—be proportioned to the degrees on the temperature scale of the ring, in such a way that a difference of 78 m.m. barometric pressure on the former is of the same length as 30° *on* the latter.

If the instrument has been properly adjusted with regard to these scales, the ring, E, has only to be moved so as to make the figures of the temperature given by the thermometer, P, and of the barometric pressure given by the barometer, Q, on the respective scales, stand right opposite each other. Thus a complete correction is obtained of both variants, and the instrument is ready to indicate directly the actual temperature, T, without any calculation.

The pointer, Z (Fig. 2), made to move by the increased pressure of the manometer spring, indicates the temperature, T, on the scale of the dial plate.

When no observation is being made, the pointer stands a little under the zero of the scale, there being always a certain amount of additional pressure required to force the volume of air V′ into V, though both be at zero temperature, and the pointer therefore must rise somewhat.

When an observation of temperature is to be made with this instrument, the ring, E, is first moved into its proper position, then the knob or handle, L, is caught by the forefinger, the thumb being

Digitized by Google

placed on the dial glass, and L pulled up in an even and steady manner as far as it will go, and held there until the pointer Z stops. In this pulling up of the handle, L, the rod, *s*, is pushed downwards, closing the capillary opening, and pressing on the stem, *d*, with its plate, *b*, and the pressure being sufficient to compress the vessel, V', quite flat, and force its volume of air into the bulb of the porcelain tube, V. The higher this bulb is heated, the greater pressure is imparted to the air, which through the lead tube, *m*, is transmitted to the manometer spring, which alters its position, and transmits its movement to the pointer, Z, forcing it upwards until it stops at that degree of the scale corresponding to the temperature of the porcelain bulb.

After reading the temperature, the handle, L, is released, and from the elasticity of the vessel, V', and the spring around the axis, *e*, it immediately rebounds, the capillary passage is opened, and the pointer returns to its original position. The observation is made in a few seconds, and can be done by any one.

The fork-shaped lever, G, on which the handle, L, is fixed, is made of spring steel, and by slightly opening it outwards, it can be removed from the ends of the axis, and thus prevent any unauthorised use of the instrument.

To avoid fracture of the porcelain tubes, and enable them to bear immediate introduction into a high temperature without breaking, they are wrapped with asbestos cord, and put into sheet-iron tubes, these again being covered with a thin layer of chamotte, quartz, and fire-clay mixed together.

The graduation of the instrument is done with the necessary corrections for capillarity, according to a new and accurate method, and this new pyrometer is perfectly accurate in its indications.

The instrument ought to be very durable, as such parts of it which act by their elasticity, as the manometer spring, and the vessel, V', are subjected to strain only for the few moments during an observation of temperature.

The air pyrometer, in its new aneroid or metallic form, is specially adapted to determine the temperature of hot blast, the gases from

Digitized by Google

all sorts of furnaces, of distillation products from retorts, &c.; and will generally fulfil any demands that may fairly be expected from an accurate instrument for ascertaining temperatures for practical purposes, in cases where the temperature to be determined ranges from 0° to 1400° Centigrade.

The PRESIDENT said they were much indebted to Mr Crum for coming from Workington to read this paper. It would be printed before next meeting, when the discussion upon it would take place.

The discussion on this paper took place on the 26th January, 1892.

Mr F. J. ROWAN said he had taken a good deal of interest in pyrometers, and it is undeniable that a thoroughly good and reliable pyrometer, especially for measuring high temperatures, and able to do so continuously, is very much wanted. Mr Crum mentions some of the attempts which have been made to arrive at the method of constructing a pyrometer, but he does not by any means exhaust the list, and he has omitted some very excellent ones. He was glad to see one of these on the table. It is a specimen of a pyrometer made by Mr Murrie, who is present, with which he had had the pleasure of doing a good deal of work,—not with this identical instrument, but with several of the same method of construction. With regard to the air thermometer or pyrometer—because the name which is used is simply an indication of the range of temperatures proposed to be measured—Mr Crum has not referred to what has been done by others, and quite recently there has been a good deal of work done by Mr Callander, who has read, as lately as 10th December, a paper to the Royal Society of London on the subject, in which he describes provisions for overcoming some of the difficulties which are not dealt with in the instrument described by Mr Crum. Professor Wiborgh's instrument was described to the Iron and Steel Institute about three years ago, and in the discussion on that paper there was exhibited a very good form of an air pyrometer which is in use at Langloan Iron Works for measuring the temperature of the hot blast. This instrument, which was

Digitized by Google

invented by Mr Frew, was described in the discussion. Now, in the case of Professor Wiborgh's pyrometer, the great difficulty that faces the making of all such instruments is still to be met with, and that is the fact that it is almost impossible to maintain a constant zero. Whatever these instruments may be made of, they are liable to alteration of the zero by use. The materials must become more or less destroyed even in the case of the very finest porcelain. Constant and repeated exposure to high temperature causes that material as well as glass to shrink on itself, and the volume of air will be altered, so that the zero, which is arranged for a certain volume of air, will not remain constant. There are some other sources of error in that instrument which can be readily seen. For instance, the porcelain bulb is covered with iron, and then with asbestos, and then with something else; but it is perfectly plain that the temperature of the air in the bulb cannot be the temperature of the flame or the hot gases to which the outside is exposed. The non-conductivity of the porcelain itself, and of the iron and the asbestos which are put round to protect it, must be taken into account. Besides that, there is the fact to be remembered that it is only a small portion of the air which the instrument contains that actually becomes heated at all. Even if the air in the bulb is heated, the air in the capillary tube cannot be heated, and therefore the indication is not the result of the expansion of all the air contained in the apparatus. There is the liability to fracture to which Mr Crum refers once or twice, and it is a very serious matter when dealing with very friable material such as porcelain. There is one thing which he could not understand in the description of the principle upon which this instrument works. At the top of page 128 he says, "The principle upon which the pyrometer is based is as follows:—The volume of air, V, in the porcelain bulb is allowed while in communication with the outer air to assume the temperature, T, which is to be determined, the communication is then cut off, and into this volume of hot air, V, another volume, V^1, is introduced *also under atmospheric pressure*," &c. Again, lower down, "Before introducing the extra or second

Digitized by Google

volume, you have, the volume of air, V, at the temperature, T, and the volume, V, at the temperature, *t*, both at the atmospheric pressure H." That is not quite possible. The instrument is supposed to be full of air at the temperature, T, and if more air is put in it is plain that the pressure must be something above that of the atmosphere, and consequently at the end of the paper there is a device for allowing something for an increase of pressure, that this description on page 128 is not quite correct. He disregards the expansion of the vessels in the one place, and he does not give room for the point which Mr Callander has mentioned in his paper: that is, the fact that of course the air in the capillary tube cannot be heated at all. There are other instruments which give indications by the expansion of gases, such as Mr Murrie's and another made by Schäffer & Budenberg. With the former he had taken readings up to about 2000° Fahrenheit. No material will stand constant use when exposed to such heat. Engineers want to measure the temperature of a steel melting furnace. No one knows what that is, but an instrument to approach that is what is wanted. There is a possible method on which a pyrometer may be constructed which Mr Crum dismisses rather summarily when he speaks of indications by the colour of the glowing body being made use of. It is quite true that when depending upon the colour directly emitted from the glowing body to the eye of an observer, it is very difficult to arrive at anything reliable, but it is possible to observe temperatures by interposing coloured glasses. Many years ago he (Mr Rowan) made a number of experiments in which flame was observed with coloured glasses with the object, not of measuring the temperature, but of judging of the amount of light emitted by the flame at different stages of the Bessemer process. The results were communicated to the first meeting of the Chemical Section of the Philosophical Society, Glasgow, through his brother, and he then suggested that that was a possible way of making a pyrometer. The combination of coloured glasses was used for the purpose of observing the flame, and he found that, at a certain temperature, it showed no colour at all. It was simply a white flame, and the point to be observed in

Digitized by Google

the process was when the temperature fell. There was a very small flame, and the flame produced a brilliant red. A friend of his, who is a well known Swedish engineer, worked out a pyrometer on similar lines, but he made use of a number of layers of glass of the same colour. He took blue, and by observing the appearance of the furnaces or flames of known temperature, he was able to arrive at a scale of temperatures from the number of glasses that he put into his apparatus in observing others.

Mr MURRIE said Mr Crum made two statements that he thought it right to point out and correct. These were, that there was not an accurate pyrometer in the market, and any pyrometer which was at one time looked upon with some favour had not maintained its reputation. He had spent two years in examining into and experimenting with different kinds of pyrometers brought out during the past century, and was surprised at the number and variety put forward during that period, so much so that he found it impossible to overtake all that had been done in that line. There was one form of instrument that had appeared again and again which seemed to him to contain within it the elements of a really serviceable and accurate instrument, viz., the raising of the boiling point of a liquid by pressure—for instance, such as compressing nitrogen in the extreme end of the ordinary mercurial thermometer. In perfecting an instrument on these lines, an instrument was evolved which after six years' working, under nearly every possible condition, had shown itself to be both accurate, serviceable, and reliable. The construction of this instrument can be readily understood by comparison with an ordinary mercurial barometer. If the vacuum end of the long leg of such an instrument be grasped in the hand it will be observed that the mercury in the tube sinks or recedes a little, due to the heat of the hand increasing the evaporation of the mercury, and, if a hood be placed over this end, and a Bunsen burner be arranged to heat the air therein, the mercury will recede still further. Instead of having the opposite end of the leg open to the atmosphere, if it be sealed by a pressure indicator, preferably a mercurial one, the mercury in the long leg will not recede, but the

Digitized by Google

pressure indicator will indicate the pressure of the vapour in the vacuum space, which may now be termed the expansion chamber of the pyrometer. Granting the pressure indicator to be accurate, and the dial to be graduated so as to show the temperature of the saturated vapour corresponding to that pressure, it is clear that you have here a really accurate pyrometer, capable of indicating temperatures to the fraction of a degree up to 2200° Fahrenheit, and possessing the following distinctive features. The indicator may be any reasonable distance from the expansion chamber, say one mile, without the accuracy of the readings being affected, granting, of course, the connecting tube be led in a horizontal plane. Again, the connecting tube may be bent or twisted; the expansion chamber may be crushed in or expanded without the accuracy of the readings being affected, condensation of the vapour or fresh evaporation of the liquid maintaining the equilibrium. The tube leading from the expansion chamber may be passed through a much hotter or colder medium than that of the fluid enveloping the expansion chamber, thus enabling temperatures to be ascertained at any desired point without regard to thickness of walls or other conditions of a like kind, say in the centre of a retort, funnel, flue, or the bottom of a vessel containing a liquid which may be much hotter on the surface than at a lower level. It is also exceedingly sensitive, instantaneously indicating the slightest variation of heat, but the most important feature consists in its retaining its accuracy without regard to the number of times used or the length of time it had been continuously at work, allowing of course that it is not abused. It gives the reading right off without allowances of any kind having to be made, and can be manipulated by a youth fresh from school. In manufacturing industries the instrument is of special value on account of what may be called its regularity, and this is precisely what is wanted. A galvaniser, for instance, has, say, five well defined heats, which, he has ascertained from working with the instrument, give the best results for different thicknesses of plates, these heats varying from 900° to 1000°. The galvaniser is not interested in any range outside these limits, and if with one kind of

Digitized by Google

plate he finds a heat of 950° to give the best results, it is of vital importance when again coating the same kind of material that when the same heat is reached the instrument will not approach to 5° or 10°, but to a fraction of one degree, register the same temperature; and this is what the instrument in question is guaranteed to do and has demonstrated during six years continuous work will do. The same applies to nearly every industry. A steel manufacturer can produce perfect castings by maintaining the metal at, say, 1800 degrees for a definite period. A caustic manufacturer can save his material and costly pans by arresting the rise of temperature at the precise moment. A glass ware manufacturer can produce unbreakable ware by maintaining his ovens at a uniform temperature. These manufacturers have proved that the instrument has fulfilled all the desired conditions. He mentioned one or two instances in confirmation of this. The first pyrometer he sent out, fully six years ago, to a well known English manufacturing firm, had the week previous been returned for overhaul, and with it a statement that they had it in continuous use during that period and found it of great value. The second pyrometer was supplied to a Scotch chemical manufacturer for his caustic pots, and is still at work. Twenty instruments were supplied five years ago to an English manufacturer, guaranteed with a maximum variation of two degrees at 600°. These are still at work, and quite recently he was informed that a test had just been made showing that they were accurate to half a degree. The Woolwich Arsenal authorities have had them in use for several years, and have proved by their repeat orders that they are satisfied, one of the superintendents informing him that they could do what they could never achieve with any other instrument, regulate the heat of their annealing ovens. This shows that there is an accurate pyrometer in the market, which was not losing, or was likely to lose its hold.

Mr GEORGE CARRUTHERS THOMSON said he was very glad to see this paper, as some investigations he was carrying out required the use of a reliable pyrometer, which must be reasonably accurate, stand carrying about from place to place, and suitable for use at

Digitized by Google

heats above 400° to 500° Fahrenheit without injury. The German Society of Engineers, in the rules published by them for the method of procedure in boiler trials, recommend the use of a mercurial thermometer up to 360° C., and beyond that the use of calorimetric methods for determining temperatures. He had found large differences in the readings when comparing pyrometers. A metallic pyrometer is not to be depended upon unless checked frequently by the hydro-pyrometer, and all the usual tension pyrometers require the same treatment. It has been objected that the porcelain tubes require protection from the extreme heats used in furnace work, and the means used for protection will interfere with the true reading of the instrument, this, however, holds good in the case of the other pyrometers (tension and expansion of metals) alluded to, but given sufficient time of exposure, they will attain the same temperature. A great advantage of this pyrometer is, that if a tube breaks, there is only the tube to replace, which is easily done at small expense, and not the whole instrument, and as it will record accurately some 2000° Fahrenheit above what can be done with the mercury thermometer, it will pay to use it in preference to other pyrometers demanding more or less skill in their use. He had been asked if the vapour of water contained in the air would not vitiate the readings of the instrument, but for all practical purposes this can be left out of account, as the non-saturated vapours of liquids, at a little above their boiling points, generally obey Boyle's law, and the instrument is never used for temperatures where the mercury thermometers can be used. Professor Wiborgh, in 1888 (Swedish "Iron Office Annals"), said—"It is of little practical importance whether perfectly dry air be used, but for strictly scientific research, the vapour of water can be removed, in the mercurial instrument, by connecting the open top of the manometer tube with a small tube containing calcium chloride or pieces of pumice stone, saturated with strong sulphuric acid, to dry the air to be introduced." At the same time he learned from Mr Crum that the volume of the hot bulb is about 40 times greater than the amount of cold air to be introduced, so that this of itself renders

Digitized by Google

the instrument practically accurate, as the amount of vapour introduced could only be infinitesimal, and would behave as a perfect gas on expansion, and the time required is only a few seconds. In testing the efficiency of combustion in a boiler plant a difference of 5° or 10° Fahrenheit is of no practical moment, but it makes a very great difference if it runs up to, say as high as 200° or 300° Fahrenheit, when the total difference between the air entering the furnaces and leaving the boiler flue is only some 500° or 600° Fahrenheit. The aneroid instrument is very ingenious, and has the great advantage that a large number of observations can be taken with it at different parts closely following one another, so that the same correction stands good for all, whereas in the pyrometers in ordinary use, each one must be checked and corrected separately, which involves a large amount of extra work. This paper is very clear, and the matter treated very thoroughly. He trusted that it might not be long ere another paper be brought forward, giving the results of comparative tests on various pyrometers under similar conditions of working.

Mr ROWAN said he should like to make one remark. He intended to say a word about the use of these calorimeters to which Mr Thomson had referred. They cannot give the temperature to which the copper ball is exposed. They are only intended to give an approximation, because the piece of copper is exposed to the heat as well as it can be without being held in the flame, and then transferred to a vessel containing water. It is an uncommonly ticklish thing to fish a very small piece of copper out of a furnace and transfer it to a small cylindrical vessel of water, which is held outside of the furnace. Anyone who has tried it will know about it. The copper ball rapidly loses its heat by radiation from the very moment that you open the door, and the higher the temperature the more rapid is the loss; and by plunging it into the water you only get a very rough approximation. In one case where he was making some tests with Siemens' copper ball pyrometer, one copper ball melted and that showed that it was at least at the temperature of melting copper, which is well known. Another ball in the

Digitized by Google

same part of the furnace, but which was not exposed to the cutting action of the flame was dropped into the water, and he thought he was correct in saying that in this case there was a difference of 500 degrees. He thought Mr Thomson wrong to compare the calorimetric methods with direct reading instruments. He spoke also of the rapidity of the movements of mercury in thermometers as compared with the indications on Murrie's gauge, the scale of which is constructed according to a curve. The movement of the pointer in all these instruments must be slow at starting, because the degrees of the scale are small, and the transmission of heat through the metal tube must be slower than through a thin glass bulb.

Professor JAMIESON said he had done a good deal of pyrometrical work, and was exceedingly glad when he got Murrie's pyrometer into his hands. He concurred with what Mr Rowan had just said regarding the difficulty of accurately ascertaining high temperatures by means of such instruments as Siemens' water pyrometer.

The PRESIDENT said they had had a good discussion on this paper. The great test of everything is the practical test, and Mr Crum unfortunately had not been able to say or had not said that this aneroid pyrometer had been tried. The one form had been tried, but not the aneroid one. If he had said where it had been tried, it would have been of some advantage to them, but at the same time he thought they would agree with him in awarding the author a hearty vote of thanks.

The vote was heartily accorded.

Mr CRUM has communicated the following reply to the discussion on 26th January, in writing:—In regard to the objections made by Mr Rowan, I regret I have not seen Mr Callender's pyrometer nor his paper read a few days before mine. Mr Rowan does not indicate the particular difficulties that have been overcome in this later instrument, therefore I cannot follow him here.

It is incorrect to say "Wiborgh's instrument was described to the

Digitized by Google

Iron and Steel Institute three years ago." That was the mercurial instrument, as used by me on 22nd December, to illustrate the principle of the new pyrometer which was not invented three years ago.

Mr Rowan is also in error in saying Mr Frew's hot blast pyrometer was exhibited at that meeting at which I was present. I know this pyrometer very well, and have seen it at Langloan. It was described in "Engineering," 8th January, 1886, and by "communication" in the "Journal of the Iron and Steel Institute," 1888. It is an ingenious instrument, specially constructed to determine the temperature of hot-blast, by the expansion of a heated *current* of air having a fixed initial pressure. It is not generally applicable as a pyrometer, as it requires a water cistern as a regulator of the air pressure, and also a *current of air* to be passed through a metallic "heater" in order to determine the temperature of any place by it.

Mr Rowan's objection to Wiborgh's pyrometer is that it with others "are liable to alteration of the zero by use, the materials must become more or less destroyed even in the case of the finest porcelain." Any temperature by which the porcelain is softened or deformed is beyond the powers of this or any other air pyrometer, and the zero has not been found to alter up to 1400° C.—the limits of this pyrometer. Any small shrinkage of the bulb, even if true, by prolonged use would make no difference in the zero, for it is not the absolute volume of air in the bulb, but the unalterable volume introduced that furnishes the expansion and measures the temperature.

As to the coverings put upon the porcelain tube and bulb, this is only the application of a little common sense to protect this material. There is no other ordinary substance which can stand high heats so well without alteration, and which uniformly maintains its volume through a wide range of temperature. To plunge a cold, bare porcelain tube into flame would be foolish, and to attempt to insert or expose such a tube to the vibrations of 5 to 10 to hot-blast pressure, would risk fracture. Hence the need of protection. These coverings certainly require to transmit the heat to the bulb,

Digitized by Google

as Mr Carruthers Thomson has clearly said, and a portion of every pyrometer must acquire the temperature of the place where the degree of temperature is to be measured. To "take into account the non-conductivity of the iron and asbestos covering" is surely absurd when this portion of the instrument may be fixed in flues, etc., and these coverings certainly acquire the local temperature in a few minutes.

Mr Rowan next says "it is only a small portion of the air which the instrument contains that actually becomes heated at all." If this was true the instrument would be worthless. Next, "even if the air in the bulb is heated, the air in the capillary tube cannot be heated." This is not required, as the office of the capillary tube is only to transmit to the manometer the pressure arising in the bulb, V, from the introduction of the volume, V^1, and the heat imported to it in the bulb, V.

Mr Rowan's next reference is to page 128, and he pronounces my plain statement of fact—"not quite possible." He here confounds the temperature, T, and pressures, H and *h*, which I have shown distinct, and there is no "device for allowing something for an increase of pressure." The total increase of pressure is what is measured in the manometer, and it gives directly the temperature, T, required, without any allowance. The volume of the capillary tubes and the expansion of the porcelain tube does not influence the result, because we are not heating an *enclosed* volume of air to measure its absolute expansion. Mr Rowan has quite failed to grasp the principle of this pyrometer—which is the expansion of only the small definite volume, V^1, that is pressed into the large volume, V. This large volume while being heated is open to the atmosphere until the moment of the introduction of V^1, and during the few seconds of heating this small volume, this alone gives the expansion and measures the temperature.

It is easy to see the error Mr Rowan has fallen into, and which vitiates all his criticism. He has looked upon this pyrometer as similar to others we know so well, with a closed absolute volume of

Digitized by Google

air or gas heated up from an initial temperature, and the expansion of which measures the degree of temperature.

The limit to the use of this instrument is about 1400° C., and therefore it cannot be applied to measure the temperature of a steel melting furnace.

I have not been able to find out the second of the two statements Mr Murrie says he points out and corrects. I did not say there was not an accurate pyrometer, the worst I said was, that the position of the few that remain indicates that they are not equal to the requirements of modern practice.

Mr Carruthers Thomson has kindly put the question of atmospheric vapour clearly, and answered it fully, for which I am obliged. The sketch shown by Mr Thomson of the iron box, C, for holding the cylinder or ball while being heated, is very good, and seems much better than any I have used.

I am glad to avail myself of the President's hint as to the practical test of work with the aneroid pyrometer. I have used the mercurial instrument for over a year, and nearly twelve months ago I had the first aneroid, by which I determined flue and flame temperature up to 860° C., and hot-blast to 760° C. regularly. In October last this new pyrometer was in every day use at several of the largest Swedish ironworks and blast furnaces, such as Domnavet, Sandviken, Stjernfors, Gysinge, &c. It is also in use in Germany, and in November five were ordered from the United States.

Digitized by Google

Note on Fischer's Pyrometer, by Mr George Carruthers Thomson, received 2nd February, 1892.

Fischer's Calorimetric Pyrometer, A, consists of a metal cylinder, *e*, fitted with a lid having a hole for fixing a thermometer, *a*, which

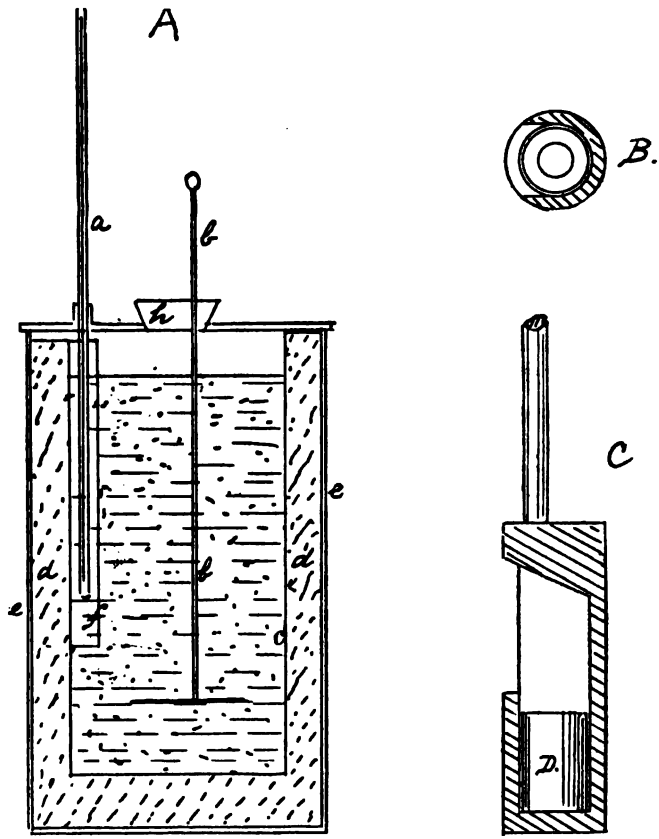

is divided into tenths of a degree Centigrade, with a very fine thread of mercury, and indicating from 0° C. to 50° C. The cylinder, *e*, contains a second cylinder, *c*, of thin copper, platinised to prevent oxidation. The thermometer in this inner cylinder is protected by a metal shield, *f*, from any harm. The stirrer, *b*, is a

Digitized by Google

copper rod having a small piece of sheet copper fixed at the bottom, and a glass or porcelain handle at the other end. The space, *d*, between the cylinders is packed with asbestos, wool, or other non-conducting substance. The inner cylinder is filled about three-fourths full with a known weight of water. B is the cross section of the iron box, C, for holding the iron or platinum cylinder, D, when placed in the flue or space whose temperature is to be determined. The instrument is used as follows. The cylinder holder, C, is withdrawn from the flue and carried to the cylinder containing the water, tilted up, and the cylinder, D, dropped through the hole, *h*, into the water, when it falls on the stirrer, which is moved up and down rapidly, while observing the thermometer. When this is at its maximum, it is read off. Call this temperature t_1; the temperature before dropping in the hot cylinder we shall call t_0, the weight of hot cylinder $= p$. The weight of the water in the calorimeter, added to the water weight of the copper vessel and stirrer itself $= p_2$ (water weight means the actual weight multiplied by the specific heat—*i.e.*, 0·094 for copper; the thermometer, if very slender, may be left out of the calculation). The temperature of hot cylinder, T, is found by the formula,

$$T = t_1 + \frac{p_1 (t_1 - t_0)}{pc},$$

$c =$ specific heat of hot cylinder, D. The water should be changed as soon as it reaches 40° C. The operation is quick, taking only about 1½ minutes to withdraw and take the necessary readings of the thermometer, and is very much easier to handle than any other of its class.

Digitized by Google

Digitized by Google

On Some New Forms of Bends and Junctions in Tubular Construction.

By Mr J. MILLEN ADAM.

(SEE PLATE V.)

Received 18th December, 1891; Read 26th January, 1892.

ABOUT two years ago, in the effort to form a more perfect sheet iron pipe to convey air or gases around bends and through junctions with a minimum of frictional resistance, I finally adopted a section which offered some peculiar advantages, and which it may be possible to turn to other and perhaps more important uses.

The difficulty of bending a tube of large diameter without altering the sectional form and also weakening the walls of the tube is great, and involves much labour and care, while a *symmetrical* junction of two cylinders, especially if of unequal area, is practically impossible.

A polygonal form was therefore adopted, and although the principles apply to any regular polygon, the following illustrations are for convenience mostly hexagonal sections.

A description of these forms naturally falls into three divisions: 1st, The mathematical basis of the design; 2nd, The uses to which it is applicable; 3rd, The methods of construction and practical advantages, if any.

For clearness I shall take these in inverse order:—

I. The sides of these bends are each formed of a separate plate or strip, cut to the proper form by geometrical projection upon the flat, flanged along both edges to an angle—for hexagons—of 60°

Digitized by Google

from the horizontal plane, which throws but little strain on the material, each pair being joined together flange to flange, externally and riveted, brazed or otherwise jointed (see Fig. 1A, Plate V.). This gives a bend of constant section, having no transverse lap or joint from end to end, and all the joints parallel to the axis of the tube.

Such a bend may also be tapered to almost any ratio of diminution or expansion with equally perfect symmetry (Fig. 3), by simply tapering the curved strips of its several sides; and a similar bend may be mitred tangentially at the end, or cut off by the intersection of a plane at any angle, as for an affixed branch to the side of a larger pipe (Fig. 4).

A polygonal bend may be curved upon any face (these I call X bends) or upon any angle (Y bends, Figs. 1 and 3), and as they may be cut off in projection at any arc of the circle, 30°, 45°, etc., etc., it will be apparent that irregular deflections through intersecting planes can be accurately calculated and easily effected by combining two or more bends of the required arcs, deflected by turning them about their axis upon their common plane of connection, *e.g.*, a hexagonal tube gives therefore a choice of twelve directions of deflection, *i.e.*, at intervals of each 30° around each plane of contact, and what is perhaps of greater practical import, these angles are rigidly determined by the sectional form of the pipe. This facility of triangulation, if one may so express it, is of the utmost value in laying out work to exact measurements. It has been found possible to construct—without templates—long ranges of branched tubes, passing through various planes, and fitting accurately into positions indicated only by distance measurements.

Fig. 6 shows a rectangular pipe curved upon one of its angles, so dealt with by joining a 45° arc to a 90°, with a right angled deflection at the plane of junction, and I also exhibit two small hexagon tubes curved 30° and 60° respectively, with a similar deflection of 60°; it will be seen that a corkscrew tube of any pitch of spiral can thus be formed.

There is another structural advantage in this section—a flanged

Digitized by Google

end can be formed on a tube without stretching or creasing the material. The radial spread necessary to fill up the corners of the end flange being provided by the excess width of the plates due to the longitudinal ribs (Fig. 1A).

But perhaps it is in the *junction* of tubular structures that this section shows to most advantage. Figs. 7 and 8 represent forms in which the area of $b + c = a$, and in which the taper is equally symmetrical from a to b and from a to c, whether straight or curved. The sides marked b_1 and c_1 are both formed out of one plate, simply bent upon itself at what Clyde shipbuilders would call the "oxter," or line marked "x."

A steel tube of polygonal section can thus be curved upon even a small radius, without—in any part of its surface—disturbing the integrity of the thickness of its plates as they come from the rolling mills, and subjecting them only to a comparatively slight longitudinal curve, and this applies equally to the most awkward junctions likely to occur in tubular structures.

II. It is now necessary to refer to some uses to which these forms may be applied.

To withstand high internal pressures it will be said that this section is unsuitable, and I cannot yet speak from tests of high pressures. I have had about 2 lbs. per square inch air pressure on a straight hexagon pipe 15 inches diameter, formed of sheets of only 21 B.W.G., and while the flat panels vibrated just perceptibly to the throb of the blower, the ribs were immovable. Obviously the flat surfaces cannot blow out without pulling the angles in, and in straight lengths these latter can be strengthened, and also indefinitely supported by reducing the spacing of the transverse or end flanges. As to bends, these can be made to stand any test which a round pipe of similar weight would withstand, bends of the X type, hexagon, having the plates of all their sides curved two ways. For larger pipes, the adoption of eight or more sides would at once reduce the tendency to bulge and increase the stiffness.

Digitized by Google

If satisfactory tests can be obtained, this form would in practice be much more reliable, as one could be quite sure of the thickness and soundness of the material at every point, and, indeed, extra thickness can be put in parts liable to excessive wear, as, for instance, in the outer members of a steam bend, the part naturally found least reliable in copper pipes.

As to the joints, if riveted, the duty of the rivets would be here transformed into a tensional strain instead of shearing, and may be dealt with accordingly; and in brazing or welding any required breadth of surface can be made available by deepening the flanges.

I feel more confidence, however, in speaking of the rigidity of the structure as a whole to withstand external stress, especially when curved. This has astonished me in dealing even with light sheet metal work, much to my discomfiture indeed, when, trusting to a little bit of "spring" to come to the assistance of a faulty angular measurement, I found none.

This experience coincided with a perusal of Mr Biggart's papers on the Forth Bridge and discussions as to the difficulties of the tubular junctions on that structure, and it occurred to me with reference to such work that—to put over against the great advantages of a cylindrical tube—a good deal might be said in favour of a polygonal section.

Take again a hexagon: we have seen that besides being easily joined to another hexagon, it may be perfectly curved throughout its length (Fig. 9). A cylindrical tube must be formed in straight lengths and *kneed* at intervals.

The plates of the former section would probably be found simpler to fit and more easily bored and riveted, owing to the longitudinal shell joints being external. Then the radiating flanges offer natural and continuous rails or booms from end to end of the structure, to which may be attached internal lattice girder stiffeners, crossing from angle to angle upon simple plate liners, Figs. 5 and 9A.

As to fitting, it will be seen that in a curved tube of constant section (Fig. 9), every plate of each strake may be formed off the

Digitized by Google

same template, and even if the tube be tapered throughout, there are no transverse curves of reducing radius to be dealt with; the longitudinal curve is still a constant, and the edge flanges of each succeeding plate must approach at a ratio which is also constant.

In this way with hydraulic flanging, but six sets of dies would suffice (Fig. 9*a*) to flange every plate required for the whole shell of a curved and tapered tube, without reference of course to junctions.

III.ª The third aspect of this subject is that which originally suggested to my mind the adoption of the polygonal section for tubes, viz., the mathematical basis of the design.

With reference to Fig. 1A, the method of projecting the plate is illustrated. The line "Z" being common to the upper and lower plates of the side, and forming their line of contact in construction; the overlapping margins shown, go to form the flanges. The ratios of the curves need not be dwelt on, being variable. What I want to point out is, that the plate *a*, *b*, *c*, *d* (Figs. 1A and 2) for instance, takes its conic form naturally upon being flanged along its inner edge, without *any* stress whatever upon the material.

If the inner edge of a curved plane be thrown back, leaving the plane free to move, the outer edge of the flange will assume a concave form, and the same side of the plane itself will reciprocally take a convex form, and *vice versa* if the outer curved edge of a curved plane be thrown back the flange on its outer side tends to assume the convex, and the plane, if free, the concave form. In other words, each surface respectively assumes a form, which would lie on the surface of one of two intersecting cones (Fig. 2).

I illustrate this practically by means of the metal plate now in my hands, and the diagram Fig. 2 before you demonstrates that the flange E does not alter its superficies by being transferred from the surface of the cone AGF to the surface of the cone AHF, because these cones are similar in all respects, and the angle of the flange is upon their line of contact.

Taking the face, ABCD, at every point in the circle of pipe, the face, ABCD, is inclined at 30° to plane of axis of pipe, as each edge

Digitized by Google

is part of a circle, it follows that the face, ABCD, forms part of the surface of a cone, whose apex, "G," is on a perpendicular to plane of axis of pipe at the centre of circle of pipe, GH.

Taking flange, E—in same manner the flange, E, which is also inclined at 30° to the plane of axis of pipe, lies on the surface of a cone, whose apex, "H," is on a line perpendicular to plane of axis of pipe at the centre of circle of pipe, GH, (*i. e.*) the same line as the line of the apex of cone, AGF, and the curved line of contact between E and ABCD lies about the plane of their intersection, but as these cones are similar, it follows that the superficies of E is the same upon AHF as without flanging it would hold upon AGF. And as a corollary, when E is flanged through 60° and lies on AHF, ABCD must fall upon the surface of cone, AGF, which is the required position to form a hexagon tube.

The same demonstration applies to the upper flange of the upper plate, and to all similar plates of any regular polygon having radiating flanges. It applies to one flange only of these plates, the other flange corresponding either to the figure of the intersection of a cylinder and a cone—as at B (Fig. 2)—having a common axis, or of a plane intersecting a cone perpendicular to it, as in the case of the upper and lower flanges of a Y bend (Fig. 3); but in either of these cases the distortion of the superficies of the flange is slight, and in no case is there any distortion of the material forming true perimeter of the tube.

The discussion of this paper took place on 23rd February, 1892.

Mr GEORGE C. THOMSON said he thought the way Mr Adam had brought the subject before them is deserving of praise. The method of building these pipes is very ingenious, and makes a strong and neat job, especially in the bends and junction pieces which in round pipes are so often badly made, and with the angles far too sharp. For the purpose for which these pipes are intended, viz., the conduction of air or gases from one point to another as in the ventilation of ships, warehouses, etc., and especially on account

Digitized by Google

of the ease with which the bends are made, he considered them of very great value and a great step in advance. It is often the case that when air is propelled through pipes made in the ordinary way, that, if there are a few bends in it, before reaching the point of exit or release the whole power is gone, and testing by an anemometer gives no result. He considered they were much indebted to Mr Adam for bringing this subject before them; he would not, however, go into other questions suggested by the mode of construction adopted.

Mr THOM said he had not studied this paper sufficiently to give any opinion as to its merits, but he had noticed when in the United States last autumn that the method of bending pipes was something different from the practice here. In bending lead pipes lignumvitæ balls were used, placed inside the pipe where the bend was to be made; this kept the pipe from collapsing; they were then run out. In connecting the one pipe to the other, instead of braizing on the flanges, the inside of the flange was tapered and the pipe put through and widened the same as with a boiler tube in a tube plate. (See annexed figure.) These pipes were for steamers using steam

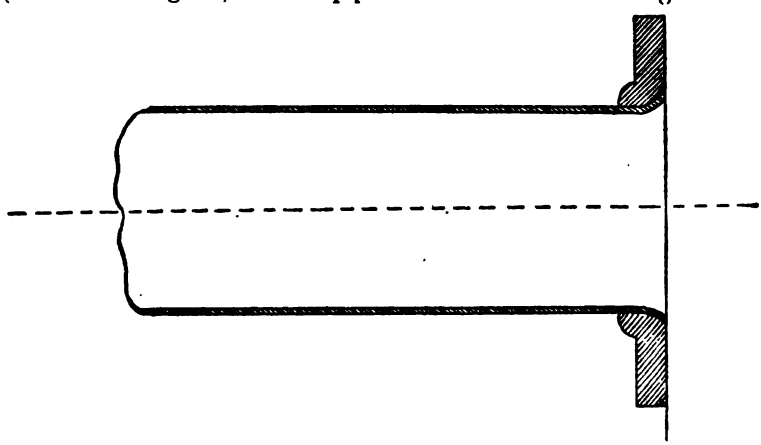

of 160 lbs. pressure with an 8-inch diameter pipe. He had seen the joints tested most satisfactorily. The pipes were for some Atlantic ships, and were therefore of large size.

Digitized by Google

Mr M'WHIRTER said he had not had an opportunity of studying the paper sufficiently to be able to speak upon it. So far as the diagrams went, the bends look nice and sweet, and such bends as engineers generally should be satisfied with.

Mr MAVOR said it seemed to him that one of the most important applications would be the making of wrought-iron tubular structures, such as in architectural or building work. He should like to illustrate, as Mr Thom had done, a method of jointing which had been used for pipes in the Electrical Lighting Station, at Deptford, and he believed it was the first time that pipes had been jointed in that way. The testing pressure was 400 lbs. per square inch. Instead of making a 12-inch iron pipe, it is divided into a number of smaller pipes, which are put into a flange forming a group of pipes. The flange is made with corrugations in it; the pipe is corrugated into flanges by means of a special tool which throws the pipe in thus. (See figure on page 159.) This joint has been found to resist pressures as high as the pipe itself would bear without bursting, and the curious thing found was that when the joint gave way it jumped one corrugation, and held up again till the pressure was up to the point it was formerly. It is rather an interesting method because it is quite new. It is used in a simpler method still for a 2-inch pipe, by putting a sleeve (see Fig.) over the top quite cold, and then a tool like tube tongs runs a group of corrugations over it, and that was found to stand a pressure of 1000 lbs. per square inch, and the pipe then "jumped" the corrugation as described before. The pipe moved under the sleeve, jumped into the next corrugation, and held again while the water did not come out. The pipes were of copper.

Mr RUSSELL—Do you mean that the pipe moved?

Mr MAVOR—It was suspended between two supports, and it had to give in some direction, and it sprang the corrugation and held again. This was a form that was invented for making water-tight tubes for electric cable. A burst happened at Deptford in one of the steam pipes and killed a man, and Mr Ferranti conceived the idea that if he could use smaller pipes, and corrugate a group of

Digitized by Google

pipes into a flange, a burst would not be so serious a matter. Instead of using a 12 or 14-inch pipe, he used a group of pipes four inches in diameter, and corrugated them into a common flange.

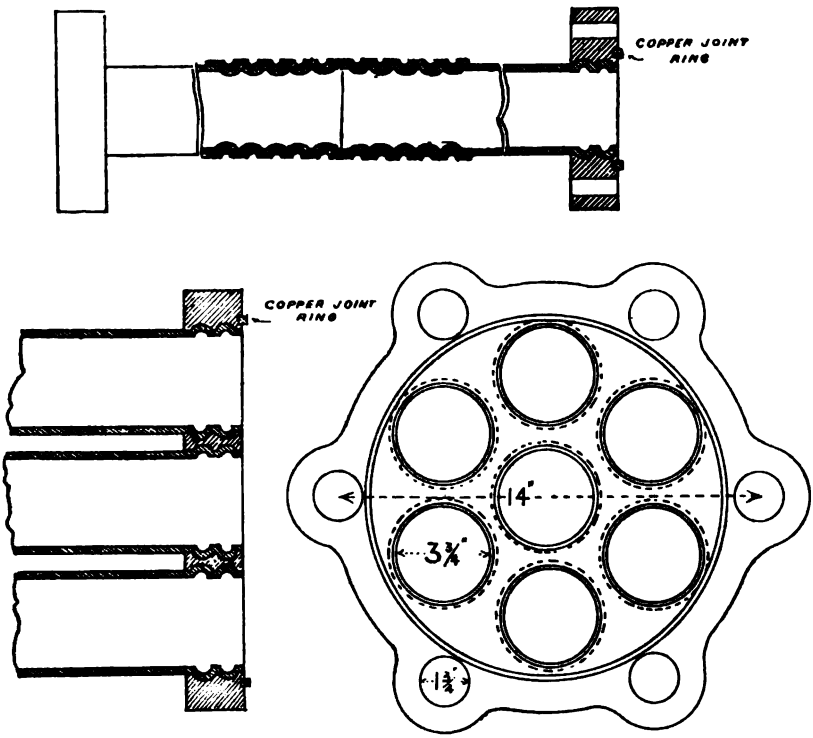

"FERRANTI" PATENT STEAM PIPE.

Mr THOM said the method of putting a nest of small pipes instead of one large one was also the American method.

Mr MILLEN ADAM said he had not very much to reply to, as the discussion on the subject had fallen somewhat flat, so far as the bends and junctions were concerned. The only remarks that have been made have been with reference to the joining of pipes, which was a subject that he entirely omitted from his paper, though it was

Digitized by Google

one to which he had given some consideration. He would not enter into that subject at present, because, so far as high pressures are concerned, as the paper stated, he did not care to discuss the effect without having some actual tests. The only important question is that which is pointed out in the paper—that it is possible to get junctions formed between two tubes by means of plates formed in themselves, and simply folded or flanged without requiring to stretch the plates in any way or alter the superficies, as in Fig. 1A, the shoulder plate and the side belly plate of a hexagonal tube are shown in projection. The actual projection for a bend of this form required the base lengthened as 3·46 is to 3, or thereby, and the arc is reduced accordingly from 90° to something like 78°, and when these are simply flanged on one of their edges, the whole surface of the plate takes the form which brings it into these plates on a 90° bend. That really was the one scientific point that he wished to bring out in the paper. This is simply a new application of a known law. He had to thank the members for patiently listening to the paper, and for giving it such consideration as they have been able to do.

On the motion of the CHAIRMAN, a vote of thanks was awarded Mr Millen Adam for his paper.

Digitized by Google

On Limes and Cements: their Nature and Properties.

By Mr ALEXANDER M'ARA.

Received and Read 23rd February, 1892.

THE following paper is intended to be generally descriptive of the properties of hydraulic limes and cements, natural and artificial, but it is necessary by way of introduction to refer in a few words to the common limes.

The common rich or fat limes which are non-hydraulic require to be slaked with water, either by sprinkling or by immersion, some time before being used. The local method is to throw water on the shells and cover them with sand, which reduces the lime to a state of hydration, but, frequently, as I hope to show you, in a very imperfect and partial manner, and portions of the lime continue to slake long after the mortar has been used. The ancients were accustomed to slake their limes by immersion. Under water they remain in a plastic state, and gain in quality as mortars by being allowed to remain immersed.

Common mortar made of rich lime hardens very slowly, and that only by the evaporation of the water of mixture and the absorption of carbonic acid from the atmosphere, with which it forms a crystalline carbonate of lime.

It has been ascertained that with rich lime mortars the carbonic acid penetrates about one-tenth of an inch into the joint in the first year, forming a skin or film which opposes the further absorption of carbonic acid, except at a decreasing ratio, so that where there is a mass of masonry the lime remains soft for an incalculable period. In illustration of this, several cases have been cited, amongst others

Digitized by Google

one by General Treussart, who in the year 1822 had occasion to remove one of the bastions erected by Vauban in 1666. After these 156 years, the lime in the interior was found quite soft.

Dr John, of Berlin, mentions that in removing a pillar of 9 feet diameter in the church of St. Peter, Berlin, 80 years after erection, the mortar was found to be quite soft in the interior.

General Pasley mentions several instances at Dover Harbour and at Chatham Dockyard, the latter in particular, when part of the old wharf wall was pulled down in the winter of 1834. The workmen were obliged to blast the brickwork fronting the river, which had been built with Roman cement, but the backing, done with common lime mortar, was in a state of pulp. The lime used had been prepared from pure limestone or chalk.

While these remarks are true of the richer limes, many of our local limes are comparatively poor in carbonate, and associated with silica, alumina, magnesia, and oxide of iron, which may either be partially combined in the natural state or enter into combination with the lime during the process of calcination, and these limes might be termed slightly hydraulic. The practice, however, has been for lime producers to show by analysis their lime as rich as possible, and for users to prefer a rich lime, for the reason that it makes a more plastic and better working mortar with the usual quantity of sand.

Now it has been proved by experiments, many and varied and extending over a long period, by the most eminent authorities, French, German, and English, most prominent among them, Smeaton, that this preference should exactly be reversed, and that the poorer common limes will make the best mortar, and will in a comparatively short time show some slight setting power, whereas the very rich limes never take band except in so far as they return to their original condition of carbonate by the re-absorption of carbonic acid from the atmosphere, and by the slow evaporation of the water of mixture. If the water does not evaporate, the mortar remains always soft. If the water evaporates too quickly, the mortar falls to powder: a result which must be in every one's

Digitized by Google

experience who has witnessed the taking down of old buildings, and the clouds of dust created by the removal of every stone.

Burnel, on the Making of Mortars (page 66), says: "The making of mortar comprehends the slacking of the lime and the mixture of the ingredients worked up with it. As we have already seen, both the former process and the nature of the latter differ, according to the nature of the lime to be dealt with. It is, however, a universal rule that all limes, of what nature soever, should be reduced to a paste before being mixed with other ingredients.

"People who have not studied the action of the hydrates, in a scientific and consecutive manner, oppose the introduction of the previous manipulation of the lime on the score of the extra expense, and on the pretence that the lime loses its strength thereby. As to the objection of the expense, that must of course be estimated by the importance of the works. The second objection is met by observing that the rich limes require to be for a long time exposed to the air to enable them to take up the carbonic acid gas; and that, therefore, so far from losing, they gain by exposure; and, moreover, it is necessary that all their particles should be put in contact with water. If the lime be not previously reduced into the state of a perfect hydrate, it is always exposed to blister or to disintegrate in a manner depending upon the comminution of its particles before being employed."

Amongst the great variety of Scotch limes, those of the Hurlet and Campsie series have a reputation which has been handed down for generations. The analysis of this lime, from the mines of the Hurlet and Campsie Alum Company, gives the following proportions—carbonate of lime, 91·40; carbonate of magnesia, 3·40; carbonate of iron, 2·07; bisulphide of iron, ·41; alumina, ·60; silica, 1·00; phosphoric acid, ·10; coaly matter, ·80; water, ·10.

We find here then, in the first place, that the Campsie lime is not so rich in carbonate of lime as is generally supposed, and that in itself would indicate slightly hydraulic properties.

Magnesian limestones are hydraulic, and when we find carbonate of lime replaced by carbonate of magnesia to the extent of 3·40,

Digitized by Google

this emphatically asserts the semi-hydraulic nature of this lime. The quantity of magnesia present is about double that to be found in any other of the limes used locally. The iron constituents are also of the maximum, and give a dark brown colour to the shells.

It may here be noted that while the practice is rather to overburn ordinary limes to ensure calcination all through the pieces, yet the best results are got from lime rather underburnt. In the first place, it slacks more freely, and with less tendency to blister afterwards, and if a hard kernel should be left in some pieces, this is amply compensated by the absence of too highly burnt or even fused parts in the other case, and, as has already been shown, the retention of a small percentage of carbonic acid confers hydraulic or setting properties to some extent upon the mortar.

It will have been seen from the foregoing remarks on the common limes, how very unsuitable for works of a permanent character are our common limestones, especially the purer varieties, and this unsuitability is greatly intensified in regard to all works where the binding material is required to resist the action of water. It was, therefore, but fitting that in a maritime nation, requiring to erect all round her shores works in the form of docks, harbours, lighthouses, &c., for the accommodation and safety of her shipping, the true source of hydraulicity, or water resisting powers of mortar, should first be discovered; and although Smeaton did not invent any particular cement, he was the first to discover that the hydraulic properties of lime depended upon the combination of the lime with clay. To this the discovery of cements is due, and the marvellous advance we have made in all matters relating to hydraulic engineering been rendered possible. The history of Smeaton's search after a mortar capable of resisting the inroads of the sea, which he undertook preparatory to building the Eddystone lighthouse, is of much interest, and his discovery is really the genesis of an important industry—important in itself as regards the many thousands employed in the actual manufacture and use of cement, but more important still in regard to its influence on the trade and commerce

Digitized by Google

of the world, and the possibilities it has afforded for their development.

General Pasley, himself eminent amongst scientific authors who studied and experimented on this subject, says of Smeaton:—"The new principle laid down by Smeaton, the truth of which has recently been admitted by the most enlightened chemists and engineers of Europe, was the basis of the attempts made by Dr John at Berlin, and by M. Vicat in France, to form an artificial water lime, or hydraulic lime, in 1818, and of mine (General Pasley's) to form an artificial cement at Chatham in 1826, to which I was led by the perusal of Smeaton's observations, without knowing anything of the previous labours of those gentlemen on the Continent, or of Mr Frost, the acknowledged imitator of Vicat, in this country."

POZZUOLANA.

Smeaton's first experiments were in the direction of giving hydraulicity to common fat limes by using pozzuolana instead of, or in conjunction with sand, and he ultimately fixed on a lime of the blue lias formation, obtained from Aberthaw.

Natural pozzuolana is a calcareous or argillaceous earth, principally composed of silicate of alumina, with a small percentage of lime, iron, magnesia, etc. It takes its name from the village of Pozzuoli, near Vesuvius, where it is still worked, as well as in other parts of the provinces of Naples and Rome, especially at Bacoli and Vesuvius, where, from their position for facility of shipping, and vicinity to the railways, they are the most important. These are all open workings. The pits at Bacoli send away 10,000 tons annually, but could do 50,000; the price is about 10d per ton. This pozzuolana is found in beds sometimes 60 feet thick, in a powdery state, ready for mixing with lime for mortar, which it renders hydraulic. The analysis gives—silica, 47·66; alumina, 14·33; magnesia, 3·86; oxide of iron, 10·33; lime, 7·03; alkaline and volatile matter, 4·13.

Burned clay was also used with the same effect, and this was styled artificial pozzuolana.

Digitized by Google

The use of pozzuolana is not unknown in Glasgow, although it has not been customary to designate it by that name. I refer to what is known as black sand from the foundries. There is a conflict of opinion as to its value in mortars of common lime. I may mention one notable instance that came under my own experience. When building my present works, on the site of what had previously been a foundry, the black sand was plentiful and at hand, and was used in the mortar. Some time afterwards, I had occasion to cut a doorway through a wall, when the mortar was found to be as hard to cut as the bricks.

Mine dust is another valuable local pozzuolana, and is well known to confer hydraulic energy to common lime. In this material there is a double action, the burned clay and the iron particles each having the power of conferring hydraulicity on lime; and the combined action goes to produce the important results so familiar to those who have used them.

These pozzuolanas, or their equivalents, seem to be found in many countries. Pasley (preface, page 9) mentions that pozzuolana, both natural and artificial, have been in common use in the south of Europe since the time of the Romans, though the latter has been but little used in this country, and the former not at all, until Smeaton first introduced it in building the Eddystone lighthouse.

Professor Scorgie, in a short treatise on Building Materials, recently published, specially arranged for the use of engineering students of the Poona College of Science, mentions two substances used in India — viz., "red ochre" and pounded brick, termed "surkhi." These substances all tend to making rich limes hydraulic; and Vicat, in summing up in regard to the various ingredients suitable for making mortar, after an experience of forty years, says: —"To a certainty, we shall be further off the best, and that in a greater degree, the more completely the combinations made use of tend to invert the scale which places the 'very energetic' pozzuolanas opposite the very caustic rich limes, and the 'inert' sands opposite the eminently hydraulic, very mild limes. Lastly, we shall have done the greatest mischief possible when we have united

Digitized by Google

together rich limes and any kind of sands. Such is the language dictated by a comparison of facts. It is necessary to add that when we meet with substances of qualities intermediate between those which constitute the categories given above, we must use medium proportions."

Vicat, quoting Dr John of Berlin, says:—"We have often discovered the nature of the lime made use of for these ancient mortars, by the particles of lumps of the lime mixed with the sand, and we have generally found it to be either rich or very feebly hydraulic." It results from this that after a maceration of 600 or 700 years, favoured by the constant humidity of the soil under which they are buried, the mortars of rich lime harden; the term is rather long, it will be admitted, for all practical purposes.

ROMAN CEMENT.

Treating briefly of the Roman cement, I have to say that the first hydraulic lime or cement of any real value known in this country was that obtained from the septaria nodules of the Kimmeridge and London clay formation, found in the island of Sheppy, discovered and patented by Mr Parker of London in 1796, and absurdly called Roman cement. Subsequently Mr Frost made a cement of the same nature, from the same raw materials, found at Harwich on the coast of Essex. While London was, and still is, confined to that uncertain and limited source of supply for Roman cement, Glasgow was favoured by the discovery, about fifty years ago, of the same mineral in abundance quite close to her borders. It was discovered by the late Mr Charles Macintosh, of waterproof fame, who then owned and resided at Crossbasket, near East Kilbride. On working the limestone at Calder Glen, the cement stone had to be removed, and the custom had been to break it up and mend the roads with it. When in England on one occasion, Mr Macintosh wrote to his foreman to lay the stone aside; and when he returned he had this hard stone burned and pulverised, the result being a cement similar to that which Parker had discovered in 1796. It is believed that Mr Macintosh, while in London, had seen the stone which was used

Digitized by Google

for making the Roman cement there, and found a resemblance in some respects. Mr Macintosh named it Calderwood Roman Cement, and it was sold at something like 30s per barrel. At the present day the price is about a fifth or a sixth part of that figure.

Roman cement was afterwards found at Orchard, near Giffnock, and near Barrhead, where I am at present working the same cement. This seam is 3 feet thick, and the analysis shows the cement to contain—lime, 48·44; silica, 17·90; alumina, 12·12; iron peroxide, 9·68; magnesia, 1·92; alkalies, 1·80; carbonic acid, 7·15.

Roman in its setting action is very similar to Portland cement, and although its tensile strength is less than that of Portland, its specific gravity is also much less, the weight per bushel being only about 75 lbs. as against 112 for Portland, so that a half more may be used in the matrix to bring up the strength, without increasing the cost, leaving the relative price as 22s is to 35s, or only two-thirds that of Portland. Again, Roman cement is entirely exempt from the objectionable element of free or uncombined lime attaching to Portland cements, and there is no risk from blowing, nature having incorporated the lime and clay in a perfect manner.

ARDEN HYDRAULIC LIME.

The natural hydraulic lime known as Arden is certainly the most valuable in this part of the kingdom, taking quality and price into account, and had the early makers of this article recognised its real character and treated it as what it in reality is—a natural slow setting cement—it should have occupied a very different position at the present day as a cementing material in building construction.

In its position amongst the minerals this stone appears to be a sedimentary limestone that has been formed by being deposited from water which held it in solution. It is very fine grained, and contains almost no fossils, scarcely the trace of a shell to be seen except at the tops and bottoms of the divisions, which are four in number, and in all from 9 feet to 12 feet thick. The layers differ slightly in their richness of carbonate, so that to have the lime

Digitized by Google

equal in quality the layers have to be carefully blended, but in this there is no difficulty as the different seams are all worked together. Some of the layers will slack with water after calcination, others will not, at least till after very long exposure. When first worked it was the custom not to grind it, but to slake the lime when it was hot in the kilns, and in this way only a portion of it could be utilised: the grinding was only commenced at a comparatively recent date, and that very imperfectly, leaving a residue of 35 to 40 per cent. on a sieve of 2500 meshes to the square inch, instead of about 10 per cent. as in the case of Portland cement. No doubt a portion of this large residue will slake when mixed with water into mortar, but at periods varying from hours to—it may be—years, so that it is obvious that fine grinding is a necessity, and the setting properties are not fully and safely developed unless the whole is finely pulverised. To be sure the expense to the manufacturer is increased in proportion to the fineness, so much so, that to reduce the lime down to a residue of 15 per cent. instead of 35 per cent. will quite double the cost of grinding, but against that you have a reliable natural cement. On the other hand, if coarsely ground, the covering capacity and consequent strength of the mortar or concrete are very much less.

Regarding the process and cost of the manufacture of this natural cement, as compared with those of the artificial product known as Portland cement, already mentioned, the former is a natural compound of lime, silica, and alumina. In the latter these ingredients are artificially united. The first cost of the raw materials—the chalk and clay—of the Portland are less considerable than that of Arden hydraulic, the chalk being more easily quarried than the hard limestone; besides the thickness of the chalk at the working face is three or four times that of the Arden limestone; thus the extra cost of Portland cement is accounted for in the artificial, mechanical, and chemical combination of the constituent parts.

In my process the lime shells from the kiln are ground in the same way as the clinker of Portland cement. Beginning with a

Digitized by Google

stonebreaker, the lime passes thence to a pair of chilled crushing rollers, and finally to the millstones, after which the powder is carried by screw conveyor and elevator to a rotary screen, 12 feet × 4 feet, covered with wire cloth, which retains and returns to the millstones any residue in excess of the required fineness. Sifting I hold to be a very important part of the process, although it has not been practised by any other makers of this hydraulic lime. It is impossible to have the millstones so perfect that they will not pass a few larger particles.

The testing of this hydraulic cement should be conducted on the same lines as the artificial product known as Portland cement. It has been my practice so to test it, and the results obtained are as follows :—

Tensile strength per square inch at		7 days,	80 lbs.	to	100 lbs.
Do.	do.	1 month,	150 „	to	200 „
Do.	do.	3 months,	250 „	to	350 „
Do.	do.	6 months,	350 „	to	400 „
Do.	do.	1 year,	450 „	to	500 „
Do.	do.	2 years,	500 „	to	600 „
Do.	do.	3 years,	600 „	to	700 „

These figures show a steady and progressive increase of tensile strength. At six months it is equal to that required of Portland cement in a week, viz., 350 lbs. to the square inch, continuing about the same ratio of increase till at 3 years it doubles that figure and reaches 600 to 700 lbs. Mr Faija, of London, in his work on Portland Cement, says at p. 41—"A cement that increases only say 10 per cent. in strength between 7 and 28 days has practically told its history, and it is known within a fraction the ultimate strength to be expected of it. But it may fairly be expected that a cement whose increase of strength in the same time amounts to 25 or 30 per cent. will continue to increase for a considerable period, and that its ultimate strength will be great; given, therefore, that a minimum strength at the expiration of seven days is specified, the increase in strength during the next three weeks is one of the surest guides to

Digitized by Google

the ultimate value of the cement." Arden hydraulic lime, as we have seen, increases 80 to 100 per cent. between the seventh and twenty-eighth days, and at three years 600 to 700 per cent. This goes a long way to prove two things—1st, that Mr Faija is correct in his hypothesis; and, 2nd, that this slow setting natural cement amply fulfils its early promise. The briquette from which these results were obtained was the inch section. By using the 2¼ inch section the same tensile strength is not arrived at for a longer period. This would show, on the other hand, that in practice the mortar joints, being under half-inch thick, will gain strength at a quicker rate than even the inch section briquette.

During all the time I have been manufacturing Arden hydraulic lime I have never observed one instance of deterioration, whether briquettes were kept dry or under water; whereas I have noticed many instances of Portland cement briquettes disintegrating after the lapse of months and years, and crumbling away by the subsequent bursting up of the free lime. In proof of this I refer you to the samples of both now exhibited.

BLUE LIAS LIME.

The blue lias lime formation is that from which hydraulic lime is principally obtained in England, and it is found over a wide area—at Aberthaw, from whence Smeaton drew his supplies for the Eddystone Lighthouse, and at Rugby, where it is also manufactured into Portland cement. This lime, while it has eminent hydraulic properties, can hardly be classed as a cement. It slakes easily with water, while the Arden lime will only partially slake, and that in a very sluggish manner, and the bulk of it will not slake any more readily than Portland cement clinker.

The lias lime manufacturers, in their instructions as to its use, say—"In using blue lias lime for mortar, &c., great care is required in reducing it to extreme fineness, and it is usually done by two ways—slaking or grinding. When slaked, lias lime may be kept with advantage for a week or ten days, but the time depends entirely on the care taken in slaking, and so important is this that

Digitized by Google

mortar may be made having a great adhesion or only a small one." As I have shown, there are no such risks attending the Arden hydraulic, as it is all ground, not slaked. Regarding the *ground* lias they, the manufacturers, say—"This lime, though reduced to powder by machinery, will, upon being treated with water in mortar-making, throw off heat, expand, and slake into finer powder. Until this has taken place, and it has been re-made with the proper proportion of sand, it is dangerous to use." Arden hydraulic, properly manufactured, does not throw off any more heat in mixing with water than the average of Portland cement. It will be seen from these comparisons that the Arden is a more reliable hydraulic lime than the lias.

PORTLAND CEMENT.

This material, absurdly so called from a fancied resemblance to Portland stone, was first manufactured in England in 1824. Since then the industry has made immense strides, and at the present time the annual output in Europe exceeds 20,000,000 tons—England 8,300,000, Germany about the same, France 1,800,000, Russia 900,000, Belgium 800,000; and in the United States of America 3,000,000. Portland cement is simply an artificial hydraulic lime, and its manufacture is based strictly on the lines laid down by Smeaton—viz., the combination of lime and clay. Any advance on his theory has been confined to the improvement in the methods of incorporating the lime and clay.

I shall not attempt to go fully into the subject of Portland cement, and indeed it is less necessary from the fact that so much is being constantly said as to its manufacture and qualities; and yet there is nothing new of any practical importance since the papers read by Scott and Redgrave and by Grant, with discussions thereon by the most eminent authorities of that day, including manufacturers, engineers, and scientists, and recorded in the Proceedings of the Inst. C.E., London, Vol. LXII., which doubtless is familiar to many present.

The principal seats of manufacture in this country are on the

Digitized by Google

Thames and Medway, and also at Newcastle, the lime used being chalk, white and grey.

Portland cement is also made from the lias lime, in Rugby, in Warwickshire, in Stockton, and in other parts in England. In America, Portland cement is manufactured from carbonaceous, argillaceous, and magnesian limestones of endless variety, obtained in many districts all over the States. In France, Germany, and Austria it is also manufactured from a wide variety of raw materials having carbonate of lime for their basis.

The cement, however, mostly used in this district, owing to the cheapness of freight from London, is that made on the Thames and Medway from chalk and clay. The process is briefly as follows:—The chalk and clay are mixed in a wash mill, and this mixture, technically known as slurry, is conveyed to millstones going at a high speed, and passed through these in a semi-liquid state, to ensure that any harder parts of chalk or clay may be broken up and mixed. The slurry is then conveyed to the drying floors. When dried it is broken into pieces of suitable size and put in the kilns, with alternate layers of coke. It is there calcined at a high temperature to the verge of vitrification. The resulting product, called clinker, is then ready for the reducing machinery, which has already been described in my hydraulic lime process.

In this country specifications for cement are numerous and varied. Engineers and architects do not agree upon any standard, and much has been said as to Government being asked to fix a standard, as is done in Germany and Austria and some other countries, but our Governments are not so paternal in their legislation.

TESTING.

The true tests, and only reliable, are mechanical ones—viz., strength, weight, and fineness. Experience has proved that the weight tests are of little value to the user, but are of value to the manufacturer in dealing with the same raw materials. The weight test is so far a guide to the degree of calcination—the higher the burning, the heavier will be the cement, taking into account the

Digitized by Google

fineness. Fineness of grinding is coming to be more and more insisted on, but there is a point beyond which it would not be economical, owing to the extra cost of reducing the cement beyond a certain point. However, it is only the impalpable powder that has any cementing property; the residue, on a sieve of almost any fineness, having no cohesive or adhesive power whatever.

AIR SLAKING, COOLING, AND MATURING PROCESS.

In the papers read by Scott, Redgrave, and Grant, at the meeting of the Institution of Civil Engineers, to which I have already referred, and in the discussion thereon taken part in by the most eminent, scientific, and practical authorities on the subject, there were developed differences of opinion in regard to various matters, but there was a remarkable consensus of opinion in regard to one point, viz., the imperative necessity of dealing with the free lime and rendering it innocuous by air slaking, previous to allowing the use of the cement. Manufacturers and scientists alike are all agreed upon this. The former issue printed instructions cautioning their customers against the use of cement that has not been exposed sufficiently to the action of air to slake the particles of free lime. The latter insist upon the cement being so treated upon all important contracts. One engineer, Mr Bernays, Engineer of the Chatham Extension Works, speaking at the meeting referred to, said he was so impressed with the danger of using Portland cement in a fresh state, that even when packed in casks and taking months to reach its destination, he considered it just as necessary to turn it out of the casks and expose it to the free action of the air as if it had come from the millstones but a few hours.

Henry Reid, C.E., on Cement, page 51, says: "The result of engineering experience confirms the now unquestioned fact, that the value of Portland cement especially increases in proportion to its slowness of setting and final hardness."

To prove the presence of this free lime, you have only to empty the contents of a sack on the floor, and after a few days exposure examine it closely. You will then find it fissured all over with

Digitized by Google

seams and cracks, showing unmistakeably the disruptive effects of the free lime. It is therefore clear, and it is now generally admitted, if not practised, that Portland cement should be kept exposed to the air for a sufficient time to allow of the air slaking of the particles of free lime. We are all familiar with the mischief wrought by this objectionable element, the result of using the cement too fresh. The free lime must slake at some time or other, and the slaking is always accompanied by an increase in bulk and consequent displacement of surrounding parts; so that the choice can only lie between, whether we shall have this element slaked before using the cement, or allow it to slake of itself after the cement has been used and in position—that is, whether we shall have it slaked while it is safe to do so, or wait till it becomes a source of danger.

If further evidence were needed in proving the evil effects of free lime, it is given in the briquettes now exhibited in various stages of disintegration.

These briquettes each represent a consignment of 80 to 200 tons and upwards, and nearly every London manufacturer of repute is represented.

After considerable study and numerous experiments, I was led to adopt a process whereby the desired object of rendering the free lime entirely innocuous is completely attained.

The cement is first hoisted to an upper floor of the store, the sacks emptied, and contents bulked, after which the cement is gradually fed into a receiver, from which it is made to fall down a cylinder or trunk, where by a particular arrangement it is caught at frequent intervals on a series of perforated shelves, constructed in a special manner, so as to thoroughly open up the body of the cement and delay its passage, while all the time a constant blast of cold air is directed upon every particle from a perforated pipe, through which a current of cold air is forced by a fan driven by steam-power. The cement is subjected to this ærating process during the whole time of its passage from the receiver until it falls on the floor, where it is allowed to lie for some time in this ærated con-

Digitized by Google

dition to ensure the full effect of the process. The process of maturing is much facilitated by the addition of a small percentage of finely pulverised carbonate of lime, and a decided improvement effected thereby, the carbonate having a marked influence in the setting of free lime, which, it is proved, exists more or less in all Portland cements.

The ground carbonate contains always a certain amount of moisture, in which a proportion of the carbonate and bicarbonate of lime exist in the soluble state. The extreme avidity of the free lime for water causes it immediately to absorb this moisture, and in doing so it slakes, thereby losing its power for evil, and not only so, but becoming to a slight extent hydraulic by the absorption of carbonic acid from the bicarbonate in solution. I am also inclined to think that when water is added in making up mortar or concrete, a further absorption of carbonic acid occurs, aided by the heat which to some extent accompanies the process of slaking. That some action of this sort occurs is perfectly certain, otherwise the addition of a per centage of carbonate of lime would weaken the cement exactly in the same way as so much sand added, but after a long series of experiments on the cements of many manufacturers, I have found the very reverse to be the fact, and instead of any weakening there is a perceptible gain in strength. Having found these effects from the application of carbonate to Portland cement, I searched some of the recognised authorities on limes and cements, and found a good deal to confirm me in the adoption of the process. Burnell, page 77, says—"Broken limestone appears to add very much to the qualities of concrete betons and mortars. Very probably this may be attributed to the affinity between the molecules of the already formed carbonate of lime and that which is in process of formation. The new crystals may group themselves more easily about bodies whose form is similar to the one they are themselves to assume, or possibly there may be a tendency in the chemical elements to arrive at a state of equilibrium, and the carbonate of lime may therefore be supposed to part with a certain portion of its carbonic acid."

Burnell also mentions a discovery by a Mr Westmacott, which

Digitized by Google

formed the subject of a patent (page 130, Appendix F)—"With a view to augmenting the resistance of the rendering coats of plaster that are executed in lime, by the admixture of pounded limestone with the material. This is in fact nothing more than the application of the principle mentioned in the text, page 77, where the tendency of the lime to crystallise around a gangue of the same nature as itself is referred to, and the inference is drawn that the presentation of the crystallised form of carbonate of lime would be favourable to the solidification of the mass of concrete betons or mortars. It is to be observed that Mr Westmacott mixes with the chalk lime that he employs considerable quantities of pounded chalk or of some equally common description of stone that has a base of carbonate of lime, and thus he obtains a mixture that is capable of setting with greater rapidity."

Vicat, page 65, says—"To obtain mortars or cements capable of acquiring great hardness in the open air, and to resist rain and heat, we must combine, amongst other things, the powders of hard calcareous minerals," and at page 201 he shows experiments with calcareous and granitic sands which are in favour of the former.

Major-General Gillmore, an eminent American specialist, and a recent writer on the subject of limes and cements, gives various experiments to show that underburnt stones possess superior hydraulicity and contain carbonic acid, and that overburnt stones, where the carbonic acid is driven off, are less or more deprived of setting power.

Henry Reid, C.E., on Concrete, says at page 55—"When in a moist state lime would probably dissolve a portion of any calcareous aggregate."

Thomlinson, page 301, says—"A very intimate mixture of quicklime and carbonate of lime has feeble hydraulic properties, and limestone gently heated so that a large proportion of it remains in the form of carbonate is slightly hydraulic. In the burning of rich limes, imperfectly burned fragments are always found which have this character, and it appears to be due to the formation of a definite compound of carbonate of lime and hydrate of lime.

Digitized by Google

Portland cement is different from all other hydraulic limes or cements in respect that the high temperature required in the kilns to effect the chemical combination of the lime with the silica and alumina drives off nearly, though not quite, all the carbonic acid gas; and any particles of lime remaining uncombined, as is always the case to some extent, have been deprived of all hydraulic or setting properties, and remain in the cement as so much quick-lime; whereas in all natural cements and hydraulic limes there is left, after calcination, carbonic acid to the extent of 6 to 8 per cent. In the analysis of the famous lime of Theil, in France, carbonic acid is present to the extent of about 8 per cent. I would further call attention to the fact, demonstrated by analysis, that when cement is laid out to air slake by the method usually adopted on large contracts, it increases in weight by the absorption of carbonic acid and moisture, in the proportion of two-thirds of the former to one of the latter. This is the same result as is effected by my process, with this difference, that by my system the cement is acted upon equally throughout, while by the usual method it is only the exposed surfaces that are properly purged of the free lime, unless where frequently turned over at great cost. Other authorities might be quoted, but perhaps these are enough for our purpose.

As showing the reliability of cement so treated, and its freedom from either expansion or contraction, I may mention having last year laid from my quarry, Barrhead, a 4-inch cast-iron syphon pipe 600 yards long, the jointing being done throughout with this matured cement, and by unskilled workmen. The syphon has been at work for several months, during which time there has been alternate frost and thaw, and not a single joint has given way. None are likely to do so now, as it is well known that Portland cement in contact with cast-iron becomes almost as hard as the iron itself.

It is not generally known, or if known not sufficiently appreciated, that almost all cements, when they arrive in the Clyde, are in a condition so fresh and quick-setting, that the test briquettes cannot be made till the small sample required for the purpose has been

Digitized by Google

laid out thinly on a cold floor from one to three or four days. While the sample is so treated, the bulk of the cement is in many cases hurried into immediate use, and made into concrete or mortar.

In the latter state it is frequently allowed to lie for hours, then turned over, adding more water, perhaps repeatedly, before it is all used up. I ask any one having experience of Portland cement whether good results are likely to follow the use of Portland cement under these circumstances, and whether there is not an evident and clear necessity for some efficient method of cooling and maturing the cement before it is allowed to be used for general purposes.

CHEMICAL CONSTITUENTS.

In reference to the chemistry of hydraulic limes and cements, it has been the custom of some engineers to specify a standard of quality by chemical analysis, and to insist upon certain proportions of lime, silica, alumina, etc. The standard of analysis given by the engineers referred to for Arden lime is as follows:—

	Per cent.		Per cent.
Lime, - - -	45·64	...	43·00
Magnesia, - - -	1·37	...	1·72
Carbonic acid, - -	7·95	...	6·10
Phosphoric acid, -	·09	...	·12
Sulphuric acid, - -	1·65	...	2·19
Water, - - -	·48	...	·66
Oxide of iron, - -	2·92	...	2·64
Alumina, - - -	6·69	...	6·64
Silica, - - -	33·40	...	37·40
	100·19		100·47

The above must have been arrived at by analysing two samples—probably selected—about the time the Arden lime was first brought into the market; but when it can be shown that it is quite common to find limes and cements of a like analysis, possessing no other features in common, so far as regards their value as cementing

Digitized by Google

materials, it will at once be seen that a chemical test without a mechanical one is of little value. On the other hand, if you find the mechanical test satisfactory, and the lime or cement shows good binding power, you need not trouble much about the analysis, precisely on the same principle as a ship or bridge builder, on proving his iron or steel by mechanical means, will not concern himself much as to chemical constituents.

In illustration of this, I may mention a series of tests which were recently made on two different hydraulic limes, supplied to a contract not a hundred miles distant. Samples of each were sent to an analytical chemist for analysis, and to another party experienced in the mechanical test. The results were as follows:—

Lime, 37 %; tensile strength, out of water, 100 lbs.; in water, 47 lbs.
„ 49 %; „ „ 70 lbs.; „ 0

It will be seen that no greater mistake could be made than to insist upon the maximum of lime, and it should be kept in mind that the hydraulic or setting properties are due to the presence of silica, alumina, magnesia, and carbonic acid, and that common limes, while richer in lime, are devoid of hydraulic or self-setting energy.

The same remark applies to Portland cement, and it has been demonstrated that the analysis may be correct in every respect, and yet the material may be quite inert, having neither cohesive nor adhesive properties.

The quantity of lime in a good Portland cement should average 58 per cent. to 62 per cent., but varies within wider limits; some authorities I have seen put the variations as great as 55 to 65 per cent. Manufacturers will be slow to admit these wide variations, and I have not found them to exceed 57 to 62 per cent. Scott and Redgrave, in a joint paper read by them before the Institution of Civil Engineers, London, and already referred to, say:—"It is useless to conceal the fact that the exact percentage of clay which is added to the lime is far less accurately determined than most manufacturers are willing to admit, and within certain not very clearly defined limits, all mixtures which contain say 74 and 77 per

Digitized by Google

cent. of carbonate of lime, when sufficiently calcined will yield a good sample of Portland cement."

EFFECT OF MAGNESIA.

There is one other point to which I think it necessary to refer before going into the comparative costs, that is the question of magnesia in hydraulic limes; any objection to this ingredient which I have seen is of comparatively recent date. It is well established that magnesia is a valuable constituent in hydraulic mortars and concretes. Vicat, after many experiments, was led to recommend magnesia as a suitable ingredient of mortars to be immersed in the sea, stating that if it could be obtained at a cost that would admit its application to such purposes, the problem of making concrete unalterable by sea water would be solved.

General Gillmore, speaking of the American lime and cement deposits, says:—"Magnesia plays an important part in the setting of mortars, derived from the Argillo-magnesian limestones, such as those which furnish the Rosendale cements. The magnesia, like the lime appears in the form of a carbonate."

In Marshal Vaillant's report to the French Academy of Sciences, from the commission to which Chatoney and Rivot's paper was referred in 1856, this superiority of the magnesian hydrates is distinctly asserted. Gillmore further says that magnesian limestone furnishes nearly all the hydraulic cement manufactured in the western part of the State of New York. At East Vienna it has been used for cement, and at Akron, Erie Co., N.Y., a manufactory of some extent is in operation.

Capt. Smith, translator of Vicat, says:—"Having analysed several old mortars, with the view of discovering, if possible, to what their superior durability might be attributed, says, 'I found, in some excellent specimens of very old mortar, magnesia to exist in considerable proportion.'" The limestones, therefore, from which these mortars were prepared, must have contained the silica and magnesia as constituent principles; and, it is to be recollected, that it is the

Digitized by Google

presence of these substances which communicates the property of hardening under water.

Professor Scorgie, in his work already referred to, says of carbonate of magnesia:—"Magnesium carbonate is a substance very similar to carbonate of lime; it loses its carbonic acid in burning, combines with silica, etc., and behaves generally in the same way; it does not slake, however, on being wetted, but combines with the water gradually, and quietly sets to some extent in doing so. Magnesium carbonate combined with lime, reduces the energy of the slaking, and increasing that of the setting processes; when other substances are present, its behaviour and combination with them are similar to those of lime. When carbonate of magnesia is present in sufficient quantity—say about 30 per cent.—it renders lime hydraulic independently of and in the absence of clay." Colonel Pasley also by experiments demonstrated that magnesian limestones are suitable for hydraulic mortars.

As shown, when dealing with the common limes, the Campsie lime and others of that strata have a reputation which seems to be largely due to the presence of magnesia. The Campsie, also in its slaking action, justifies Professor Scorgie's assertion, that magnesium carbonate combined with lime reduces the energy of the slaking, and increases that of the setting processes.

Many such evidences showing the value of magnesia in hydraulic mortars might be quoted, but perhaps these are sufficient.

USE OF SAND.

Regarding the use of sand in mortars, it may almost be spoken of as a necessary evil. In the common rich limes we have seen that pozzuolana and not sand should be used, but if the former cannot be had conveniently then sand, though not properly a substitute, is necessary to give body to an otherwise too soft and plastic material, and the coarser and cleaner the better, as the coarse particles allow the carbonic acid to penetrate further into the body of the mortar, and assist in the hardening process for this reason. In the case of cements of all kinds, sand is only good for lessening the cost of the

Digitized by Google

aggregate, and in the case of the majority of sands in daily use here, the strength is reduced out of all proportion to the saving effected. Brunell, in making the Thames Tunnel, was so convinced of this that he used pure Portland cement in the arches, and General Pasley, treating of this, recommends that only pure cement should be used on all arduous works.

As to the quality of sands, they are of very wide variety, so much so that one part of an inferior or soft clayey sand will reduce the strength of mortar as much as three or four parts of clean sharp granitic sand. This is well exemplified in the sand test which is made with what is called standard sand, being a pure silicious sand sifted through a sieve of 400 holes to the square inch, and retained on one of 900; the three parts of sand and one of cement being then carefully mixed in a dry state, sufficient water is added to damp or moisten the whole—not made into a plastic mortar as in practice—it is then again well turned over, scarcely having the appearance of moisture, and afterwards beaten into the moulds. These briquettes will at 28 days meet the required standard of 175 lbs. to the square inch tensile strain, but what relation do they bear to the mortar of three to one in ordinary practice? We shall see further on.

RELATIVE COSTS.

The relative cost of Portland cement and Arden hydraulic lime per ton may be taken fairly at 36s and 12s respectively, and the weight per bushel as 112 lbs. and 75 lbs. Mortars are all made by measure, and thus while a ton of 2240 lbs. Portland cement costs 36s, an equal bulk of hydraulic lime weighs only 1500 lbs, and costs 8s; thus Portland cement may be put at $4\frac{1}{2}$ times the cost of hydraulic lime, bulk for bulk.

In using cement and common sand for mortar no general standard of strength can be always attained, as the qualities of the sands in use vary so much. From a series of tests made with ordinary Clyde sand I was unable to obtain a higher average tensile strength at 28 days than 61 lbs. per square inch, using cement tested by

Digitized by Google

itself at 400 lbs. in seven days—equal to at least 450 lbs. in 28 days—and sand in the proportions of 1 to 3.

This result is only about one-third of what the test should have been with standard sand, but we know the latter is not used in actual practice. After the lapse of the same period I have found Arden lime briquettes to stand a tensile strain of 150 to 200 lbs per square inch.

Taking therefore the cost of one ton Portland cement at 36s, three tons sand at 3s per ton, and the cost of mixing and making up the mortar at say 5s, we find the total cost of the aggregate of four tons to be 50s, equal to 12s 6d per ton of a mortar capable of resisting 61 lbs., while for 8s we get an equal bulk of Arden lime capable of resisting 150 lbs. tensile strain per square inch.

At this rate the addition of only 1½ parts common sand to every part of cement would reduce the tensile resistance of the mortar to an equality with that of Arden lime, but instead of the aggregate costing 12s 6d per ton, it would cost nearer 20s per ton, against 8s per ton for the Arden hydraulic lime. Again, if we take 12s 6d as the cost of a ton of Portland cement mortar, one part cement to three parts common sand, the proportionate value of an equal bulk of Arden lime should be 30s 9d per ton.

If, on the other hand, we reverse the order and take Arden hydraulic lime as the standard, a quantity equal in bulk to a ton of Portland cement costs 8s; while a ton of Portland cement mortar, made with common sand, and only capable of resisting 61 lbs., as against 150 lbs., is only value for 3s 3d per ton—showing unmistakeably the great loss in value of the cement as a mortar when used with common sand, and showing such a mortar to be worth little more than one-third the value of Arden hydraulic lime used by itself.

The tests referred to were made up in small quantities capable of being manipulated by the trowel. The cement and sand were much more carefully measured and mixed than they can be in actual practice, and the mortar thoroughly wrought up to bring out the highest possible results.

Digitized by Google

Gillmore, at par. 503, says—"M. Pascal, an eminent French engineer, who had large experience at Marseilles harbour and elsewhere, expressed his preference for good hydraulic lime over any pozzuolana mixture, or any natural or artificial cements, provided plenty of time could be allowed to harden before immersion."

M. Vicat also intimates that Theil hydraulic lime is the only one with which he is acquainted that could unquestionably furnish a mortar indestructible by sea water.

Many fine structures have been erected in Europe of concrete made of Theil lime. Of the Vanne aqueduct for supplying water to Paris, thirty-seven miles have been executed in this concrete; in the forest of Fontainebleau there are about three miles of arches, some of which are 50 feet high—the whole structure, including arches and pipe, is one mass of solid masonry without joints. A Gothic church at Vezinet, near Paris, having a spire of 130 feet high, is also a monolith of concrete of lime of Theil. The lighthouse at Port Said, the northern terminus of the Suez Canal, is also built of concrete of Theil lime and Port Said sand, and is a monolith 180 feet high. The jetties which form the harbour of Port Said are built of huge blocks of concrete formed of the same material. In their construction 120,000 tons of Theil hydraulic lime were used. There were 25,000 blocks, each weighing 25 tons. The docks of Marseilles were constructed of similar concrete. At the harbour of Algiers, commencing in 1833, the French constructed blocks of hydraulic lime concrete, containing 353 cubic feet each, to withstand the force of the sea. The blocks weighed about 25 tons each. The harbour works of Alexandria, Egypt, consumed 175,000 tons of Theil lime in the construction of concrete blocks similar to those of Port Said.

There can be no doubt that a cement of slow-setting properties, such as this hydraulic lime, is safer to work with, especially where it does not come immediately into contact with water; and Professor Scorgie, in his treatise already alluded to, says—"Hydraulic limes are of much use for all the ordinary purposes of building; as on the one hand, where the building is not likely to be exposed

Digitized by Google

immediately to the action of water, and where its action is not severe; or where, on the other hand, it would be improper to use pure limes, as explained before. In the use of hydraulic limes, moreover, there is less danger than in the use of cements of an unskilled person spoiling the work."

Authorities on Limes and Cements:—

Major-Gen. Gilmore, U.S. Army—"On Limes, Hydraulic Cements, and Mortars."

Geo. R. Burnett, C.E.—"On Limes, Cements, Mortars, etc." (Weale).

Henry Faija, C.E.—"Portland Cement for Users" (Weale).

Professor Scorgie, M.I.M.E.—"A Short Treatise on Building Materials, specially arranged for the use of Engineering Students of the Poona College of Science."

Col. Pasley, Royal Engineers' Establishment, Chatham—"On Limes, Cements, etc."

Vicat on "Cements," translated by Captain, afterwards Major-Gen. Smith.

Charles Tomlinson—"Cyclopædia of Useful Arts and Manufactures."

Harry Reid, C.E.—"A Practical Treatise on Concrete Making."

Smeaton's Account of Building Eddystone Lighthouse.

Higgins on Calcareous Cements.

Treussart—"Mémoires sur les Chaus et Ciments."

Petot—"Recherches sur la Chaufoumerie."

Berthier—"Traité des Essais par la Voie sêche."

Harry Reid, C.E.—"Portland Cement: its Manufacture and Uses."

Digitized by Google

The discussion on this paper took place on April 26th, 1892.

Mr C. P. HOGG said he thought this was an important paper, on a subject of considerable interest to those members of the Institution who have to do with masonry and brickwork, and especially with concrete, in which cement is a very essential element. As a manufacturer of Arden lime, Mr M'Ara has not unnaturally said all that can be said for Arden lime, but the fact that engineers can get the same strength in a week by using Portland cement as they can get in six months from Arden lime, was, he thought, a very powerful inducement to use Portland cement, notwithstanding the difference in cost. At the same time, he believed that Arden lime might be used with advantage very often where Portland cement is now used. With reference to the question of the relative cost, on page 183, Portland cement can be got anywhere in the country for the price that Mr M'Ara puts down—36s per ton—but if a fair comparison is made, then Arden lime should be taken at 15s per ton. It is quite true that it may be bought in the Glasgow district at 12s a ton, but something ought to be added for carriage. It would be quite as unfair if a Portland cement manufacturer was to take 20s per ton as the price of Arden lime on the banks of the Medway. Again, on page 184, in comparing the relative cost of mortars, Mr M'Ara puts down 5s for mixing four tons of Portland cement mortar, and then compares the cost of one ton of that mortar with the cost of an equal bulk of Arden lime as it is bought from the manufacturers. To make the comparison quite fair, 1s 3d per ton ought to be added for converting the Arden lime into mortar, and he would therefore put the cost of the Arden lime mortar at 10s, plus 1s 3d for mixing—in all, 11s 3d as compared with Mr M'Ara's 8s for an equal bulk of Arden lime. That is to say, he would raise his price 25 per cent. to make a fair comparison, and add 1s 3d for mixing. Further, the author compares the strength of Arden lime with Portland cement mortar made with inferior sand. However, on that point he quite agreed with Mr M'Ara, so far at least as to say that the sands of the Clyde

Digitized by Google

valley do not make good mortar. They reduce the strength of Portland cement to a very serious extent—a great many of them do at least—much below the standard sand test; probably to one-half of the standard sand test. To such an extent was this the case that he did not believe in the sand test for cement. It might be a very good test as regards the quality of the sand; but as to testing the cement by the sand test, he did not believe in it. With reference to the testing of Portland cement, he quite agreed with Mr M'Ara, that the weight was of very little consequence to the user. If one is to judge by weight, he ought to go by specific gravity. It was a very usual thing some years ago to insist on a certain weight per cubic foot, and the finer grinding came into vogue; and you would find both weight per cubic foot or per bushel, and also the fineness in grinding. In this case, possibly the engineer was insisting on two things which were incompatible to some extent, because the finer cement is ground the lighter it becomes. He thought the three important tests were—first, freedom from expansion and contraction, which can be tested by putting a small pat on a piece of glass; second, tensile strength; and, third, fineness. By preference he would choose Portland cement that was rather slow in setting, as being in the end the best to work with, and giving possibly the best results. He agreed with Mr M'Ara as to the importance of air slaking. He had seen tests made from freshly delivered cement break at very low strains, and the same cement, after being cooled for 15, 16, or 24 hours, increase in strength by 50 per cent.—that is to say, the cement was delivered fresh and hot. At the same time he was disposed to think that air slaking might be overdone. He had seen tests made from heaps which had been lying four months in a dry shed; where the cement was gathered from the exterior of the heap, it gave results very much below specification test, while from the interior of the heap it was 50 per cent. greater. Possibly the cement was absorbing the moisture of the air. It certainly does not affect the cement to any great extent, but only on the surface of the heap. He had no experience of Mr M'Ara's aeration and mixing with

Digitized by Google

finely pulverised carbonate of lime, and was surprised to find that it increased the strength of Portland cement. As an engineer he would prefer to use the cement as it comes from the manufacturer rather than to trust to any one mixing it and aerating it at the same time. He thought the paper was a very valuable one for the Transactions, and contained a deal of information on the subject.

Mr C. C. LINDSAY said, as far as Arden lime is concerned, he thought that engineers might act very judiciously in using Arden lime for ordinary walls. In many cases the specification of an engineer had nothing else in it but Portland cement. Arden lime acts splendidly for ordinary walls in many cases where an architect would specify Scotch lime, and he had used it repeatedly with good effect. With reference to the specific gravity of cement, latterly he had a good deal to do with cement from different makers, and the specific gravity has formed a very important point in the testing. It indicates free lime or otherwise so readily, in so much as taking 3·1 for the specified specific gravity of the cement, it is almost impossible to get such a specific gravity: 3·07 is considered very good. The difference between 3·07 and 3·1 is not very much, and still it may indicate free lime, which is a very deleterious ingredient, and would give very bad results in time.

Mr JOHN BARR said the author spoke of black foundry sand as being good for making mortar. That is confirmed in the case of the Glenfield Works at Kilmarnock. Some of the buildings there are built with mortar made with such sand, which have stood very well. He was rather surprised to see on page 168 that evidently, according to the author, Roman cement is cheaper and better than Portland cement. He would ask Mr M'Ara whether Arden lime is all hydraulic, or whether there are various qualities, some of it hydraulic and some of it non-hydraulic, and also what time he considers Portland cement, as mentioned on p. 175, ought to be exposed. The author mentions some pipes laid near Barrhead. He would like to know what pressure is on these pipes and whether they were exposed to the weather. On page 183 Portland cement concrete is spoken of

Digitized by Google

as being used in the liquid state, as if it was a mistake to use it in that way. It is well known that it is used in grouting in a liquid state, and it seems to do very well. Reference is made on page 185 to some structures made with concrete and lime from Theil. There is no information given here about the composition of this concrete—*i.e.*, what proportion of other materials it is composed of. He would ask what is Mr M'Ara's experience with regard to the expansion and contraction of concrete, either Arden lime, concrete, or cement concrete, with heat and cold?

Professor SCORGIE remarked, through the Secretary, that he agreed with the writer that pozzuolana is not so frequently nor so largely taken advantage of to improve an inferior lime as it might be, if our builders only knew how to employ it. He was unacquainted with the Arden limestone, but he thought Mr M'Ara, in his paper, had made out a good case for it as a hydraulic lime. As has been shown by the writer of the paper, and will readily be admitted by all, there is great need for some reform in regard to the method of testing Portland cements. Something ought to be done to fix and settle the standard by which the quality of a cement is to be determined. Our Society, in concert with similar societies, would be doing a good work by taking this matter in hand, and carrying it to a successful issue. In Germany concerted action has been successfully taken by the societies of engineers, architects, and cement manufacturers with the same object, and their standard rules, published under the authority of the Minister of Public Works, have received general assent, and have been productive of the best results. Mr M'Ara says that "the true and only reliable tests for Portland cement are mechanical ones—viz., strength, weight, and fineness." And there is no doubt he is right. At the same time it must be admitted there is a great want of unanimity among engineers and others as to the standard by which the quality of a cement should be tested. The various methods already in use may be comprised in the following:—(1) the determination of the chemical composition, (2) fineness, (3) weight, (4) internal tenacity or cohesion, (5) the speed of setting. Now, as stated by the author

Digitized by Google

of the paper, the chemical composition of a cement may vary within tolerably wide limits, without affording any criterion of its quality. Fineness of grinding is one of the most reliable tests, and one which cannot be too much insisted on. It is also important on account of the bearing it has on weight, and the time the cement requires to harden. The weight test is of little value to the engineer, although it is still of some importance to the manufacturer. The time of setting is so easily affected by various circumstances and conditions, that as a test it is of slight value for determining the quality of a cement. But it may with advantage be employed to ascertain whether samples are suited for the work in which they are to be used. By the strength of a cement we generally understand its tensile strength or its tenacity. Now, a cement is hardly ever in tension; it is generally in compression. But this test of strength is easily applied, and is well known. Again, the cement is tested *neat*, although we always use it mixed with a certain quantity of sand. It is evident, therefore, that, in addition to its tenacity, we want to know the strength of a good cement to resist crushing when mixed with a certain quantity of sand; also the amount of sand which may be safely and economically used in its composition. Moreover, the force with which a cement will adhere to ordinary building materials, such as brick and stone, ought to be known to the engineer and builder, and could be easily ascertained, along with the other tests mentioned above. Finally, disintegration of a cement may take place from a tendency to blow or crack after setting, arising from the material being underburnt, from unslaked lime, or from the cement containing excess of free lime. This tendency can be best ascertained by what is known as the *hot* or *steam* test. The interests of the manufacturer and engineer would alike be served by some authoritative opinion stating which of these numerous tests were to be scheduled, and which were to be considered of minor importance.

The PRESIDENT said he had used Arden lime for many years, in fact in the Glasgow district for lime he had never used anything else but a ground Arden lime. At the same time he did not think

Digitized by Google

that for some things it came up to the best Portland cement. It may no doubt be equal to some inferior cements, for foundations where quick setting is unnecessary, and where the weight comes on very gradually. Arden lime concrete, while it is also cheaper than Portland cement concrete, is thoroughly efficient for this purpose, and for buildings of any extent he had discarded the use of foundation stones altogether, and used only concrete. The whole of the workshops at St. Rollox, covering 15 acres, some of them on a very sound natural foundation, and some of them on very recently made up ground, are all founded on Arden lime concrete, and the whole of the brick walls were built with Arden lime grout, and there is not a crack in the whole of these buildings from subsidence. In forming cement flooring, the floor of the painting shop, where all the painting of the carriages and engines is done, is made of concrete, on account of the quantity of water that requires to be used for washing, and also on account of it requiring to be made safe from fire. The bottom layer is Arden lime concrete, and it is only the finishing coat that is Portland cement concrete. But there are other kinds of work for which cement concrete is superior to Arden lime; and of all the cements he had used, he found that the only really reliable one was the London cement for pier walls and for bridge walls; and for finishing work there was nothing that would come up to the best London Portland cement, if it was used in the proper proportions. He had found that this Arden lime of the Glasgow district was one of their most valuable limes; and that in the case of walls built with Arden lime, if they were grouted as the walls at St. Rollox were, and an attempt was made to cut an opening through them, such as a doorway, or an opening for shafting, or anything of that kind, he found it was far easier to cut through solid stone work than to cut through such grouted walls.

Mr M'ARA, in replying to the remarks in discussion, said in the first place Mr Hogg would observe that, especially in regard to the use of Arden lime, the paper applied altogether to Glasgow and district. He did not make any comparison with distant places, not

Digitized by Google

to speak of London, which was the home of Portland cement. In London, where Portland cement is at its cheapest, exactly as Arden lime is cheapest here, it would naturally be used in greater proportion than anywhere else. Notwithstanding this, we find that the Lias hydraulic lime is largely used in and around London, although the cost there, in comparison with Portland cement, is much greater than the cost of Arden lime here compared with cement. It is also to be noted that the Arden lime is a much more energetic hydraulic lime than the Lias, and both in chemical composition and in action more of the nature of a cement. With regard to the mixing and preparing of mortars, Mr Hogg had pointed to an overlook, which, however, is more apparent than real. While it is admitted that something should be placed against hydraulic lime mortar for the cost of mixing, that should not be at the same ratio as the sand and cement mortar, there being much more labour required in the latter to ensure that the cement and sand should be thoroughly incorporated; whereas, making mortar of pure cement or lime is a comparatively simple and inexpensive operation, there being no risk of inequality to guard against. Mr Hogg proposes to debit the Arden lime mortar with 1s 3d per ton, but less than half that amount should be sufficient. Granting, however, the higher figure, the effect is inappreciable. Mr Hogg further says, "The fact that engineers can get the same strength in a week by using Portland cement as they can get in six months from Arden lime, was, he thought, a very powerful inducement to use Portland cement, notwithstanding the difference in cost." This is a truism that has no bearing on the figures given in the paper. As a matter of fact, Portland cement is not used pure, but mixed with sand, and in the paper the comparison is made with the ordinary proportions of three parts sand to one part cement, forming a mortar which never at any age attains half the strength of the Arden lime mortar. When it becomes the practice to use only mortars that will stand a tensile strain of 350 lbs. per square inch in a week, then Portland cement will clear the field of all rivals, but at an immense increase of cost, and increasing the amount of cement manufactured fifty

Digitized by Google

times. Doubtless the day is not far distant when only hydraulic limes and cements will be used as mortars with a standard of strength fixed for the mortar, and not only for the cement or lime from which it is made. It must seem to many an absurd thing to demand of cement a tensile strength of 350 lbs. per square inch, then to use it with 300 per cent. added of an ingredient which reduces the strength to one-tenth of that standard. With regard to the air slaking and maturing process Mr Hogg has not shown that his objection is based upon any experiments made to test the correctness of the assertion made in regard to its merits. It is claimed for the process that the cement is in every way improved by it; a quick setting cement is made slower, the free lime is hydrated, and not only rendered powerless for evil, but made to add to the strength of the cement. The cement, after treatment, will carry more sand, weight for weight, than when fresh. Any one interested, and having a slight knowledge of testing cement, can by a few simple experiments satisfy himself of the value of these claims. Mr Hogg refers to unsatisfactory results obtained from cement skimmed off the surface of a heap exposed for four months. It will be admitted four months is a long time for cement to be exposed in a heap, and the excess of carbonic acid and moisture absorbed by a few inches on the outside would render it very slow setting, while the body of the cement was hermetically sealed from the beneficial action of both. Had the cement been turned over at frequent intervals the whole would have been improved, and the surface not deteriorated; this would have produced results similar to my process, but at much greater cost of time and labour, besides the great inconvenience and, in fact, practical impossibility of so treating cement, except on extensive works where large quantities were being used. Mr John Barr asks if Arden lime is all hydraulic. The Arden limestone consists of several layers, which are all hydraulic—some of them are richer in lime than others, and will slake with water, but in a very sluggish manner; others are more eminently hydraulic, and will not slake. All the seams are, however, quarried together, and get incorporated

Digitized by Google

in the kilns and grinding mills, so that there is little or no variation in quality. Mr Barr further asks how long Portland cement should be exposed to air slake. That depends very much on the character of the cement to be dealt with. A highly burned cement, with excess of free lime, will require longer exposure than one lightly burned. Mr Hogg has mentioned an instance where the cement was exposed in bulk for four months without being turned over, but it would probably have been more effective in one month with occasional turning. Regarding the syphon pipes, they were laid 20 inches under the surface; the pressure is atmospheric. He did not quite catch Mr Barr's meaning when he referred to p. 185 and spoke of Portland cement concrete being used in the liquid state. There is no mention of concrete at this page. Probably Mr Barr refers to the contrast made in the mode of making up the sand test as against the mortar in ordinary use. It is well ascertained that any excess of water used over what is actually necessary weakens the matrix, and grouting should only be resorted to where a plastic mortar or concrete cannot be applied. Grouting is, however, very effective in these circumstances, although it takes a long time to harden. Regarding Mr Barr's inquiry as to the proportions with the Thiel hydraulic lime, Mr M'Ara said that one account he had seen gave the proportions of the concrete used in the Vanne Aqueduct as 3 parts lime to 10 parts sand, incorporated with an equal bulk of broken stones or coarse gravel; and the lighthouse at Port Said is stated to have been built of Thiel lime and Port Said sand, but the proportions are not given. As to the expansion and contraction of concrete with heat and cold, he had not much experience. Certainly no changes in the temperature of the atmosphere would affect either. For further information as to fire-resisting properties, he referred Mr Barr to Vols. C. and CV. of "Proceedings Inst. C.E." In the latter it is shown 1 part of Portland cement and 4 parts broken fire brick made the best fire-resisting concrete. Arden hydraulic lime is not mentioned, but it has the same constituents as Portland cement, and doubtless it would be found an equally good fire resistant. In a recent article in a London publication connected

Digitized by Google

with the building trades, comparison was made as to the fire-resisting powers of common lime and hydraulic lime. The writer says, "In case of fire common lime mortar is quickly dried out and the carbonic acid that has been absorbed expelled, leaving the mortar a crumbling mass, whereas in the case of hydraulic lime mortar, extreme heat will only serve to glaze it over and cement the material all the more firmly." This is quite in keeping with the experience of manufacturers. To them it is well known that cement and hydraulic lime vitrify when overburned. Mr C. C. Lindsay has referred to the specific gravity as a means of discovering the amount of free lime. It might do so if the lime were slaked, but it is questionable if the specific gravity would indicate free lime in fresh cement, especially if highly burned, as it would then be as heavy as the combined cement, and highly calcined lime takes much longer to slake. He was very pleased to hear the experience of the President with the hydraulic lime, and the results obtained from its extensive use. Engineers generally may take it as a fair report of its value. These is no doubt that for some purposes Arden lime cannot take the place of Portland cement, such as for the finishing coat on a concrete floor or pavement, as instanced, but it is to be remembered that in such cases the cement is not used as it would be in foundations and interior work. In the one case it is used with a large proportion of sand, which reduces it generally below the standard of Arden lime, and, what is worse, to a quite unknown degree, as the sands vary so much; whereas for finishing it is used with a much superior article, crushed granite or Arran sand, and with a limited proportion even of these, the proportions ranging from 3 parts granite or Arran sand and 1 part cement, to equal quantities of both; and, of course, the larger the proportion of cement, the process of setting is the quicker. Very frequently Portland cement is used at great expense when hydraulic lime might be substituted with economy in every sense. Mr M'Ara further remarked that Mr Hogg had pointed out that he, being a manufacturer of this hydraulic lime, had not unnaturally said all that could be said in its favour. This is admitted, but he was quite alive to the fact that he

Digitized by Google

was laying his statements and figures before an institution whose members were both scientific and practical, and eminently qualified to test their value. That had been shown in the discussion to-night.

The PRESIDENT said he thought they would agree with him in awarding a very hearty vote of thanks to Mr M'Ara for his very interesting paper.

The vote of thanks was heartily accorded.

Digitized by Google

Digitized by Google

The Electric Motor:
A Practical Description of the Modern Dynamo Machine more particularly as a Motor.

By Mr W. B. SAYERS.

(SEE PLATE VI.)

Received 18th; Read 23rd February, 1892.

THE object of the present paper is to describe the essential features of modern continuous current dynamos, considered as motors, of the types more generally in use in this country—*i.e.*, the ring and the drum types—in such a manner as to render their mode of operation, and the essential conditions of satisfactory working, clear to mechanical engineers. In spite of the many able papers that have been read before this and other societies on the subjects of the dynamo machine, the electrical transmission of power, and kindred topics, I am not aware of any which have aimed at quite the same object as I have in view. They have all, I think, treated the subject either so deeply as to be understood and appreciated only by specialists, or so superficially as not to amount to a practical description at all. I shall try and steer between these two extremes. If an engineer has to put down a motor for any purpose he will naturally be shy of adopting one the principle of which is not at his finger ends, as is the principle of a steam, gas, or compressed air motor. Every engineer understands the broad principles on which these motors work, even though the particular line of his profession has not led him to make a study of the

Digitized by Google

properties of steam, of compressed fluids or hydraulics, or of the points to be considered in designing an economical motor of any kind.

I venture to hope then, that this paper, with the discussion of the subject which I hope may follow, will do something to assist those who have no desire or no time to make a special study of electrical engineering, to get grounded, if I may so speak, in the broad principles upon which electric motors depend for their action.

The conception of force impressed upon the piston of a steam or compressed air motor by fluid under pressure presents little or no difficulty to the mind. The force exerted by a fluid under pressure, or in rapid motion—though the fluid be invisible—is a phenomenon which is deprived of any trace of mystery by every day experience. We frequently feel the force of the wind upon our bodies, or upon our umbrellas when we use them in a storm, and it requires no more than ordinary observation to tell us that air offers resistance to compression, and that, if compressed, it exerts force upon the sides of the vessel in which it is confined. But the force exerted upon a conductor in which an electric current is flowing, when the conductor is in a magnetic field, is a phenomenon for which there is no parallel in ordinary experience. The armature of an electric motor stands clear of the other parts of the machine, except at the bearings and brushes, and the torque is exerted upon it, across an air space, without the apparent intervention of any solid material. It is not suggested that the force is exerted without an intervening medium between the two bodies acted upon, or, in other words, that action is produced at a distance. *How* it is exerted or transmitted is a question the solution of which is undoubtedly involved in the question of the constitution and properties of the ether, a subject which is far beyond the province of my paper.

THE ELEMENTARY PRINCIPLE ON WHICH THE ELECTRIC MOTOR DEPENDS.

Suppose this bar, which is 1 square inch in cross section and 39·37 inches or 1 metre in length, to be made of H.C. copper, and

Digitized by Google

to be connected at its two ends with some source of electric supply, and so to have an electric current of let us say 1000 amperes flowing through it. The effect of this current upon the bar would be that it would tend somewhat feebly to set itself in a plane at right angles to the direction of the earth's magnetic field—which is indicated at any spot by the direction taken up by the "dipping needle"—and there would be a small force acting upon it in a direction at right angles to the direction of the magnetic field and to the length of the bar. This force would be proportional to the strength of the field, to the length of the bar, and to the current flowing through the bar. The force would be due to the interaction of the electric current and the magnetic field. The magnetic field which pervades the surface of the earth is a very weak one, only from $\frac{1}{10,000}$ to $\frac{1}{15,000}$ of the strength or intensity commonly obtained between the poles of a dynamo machine or electric motor.

Fig. 1, Plate VI., represents an electro-magnet which might be constructed to produce a magnetic field of about 10,000 C.G.S. units in the air gap; this is about 20,000 times (roughly speaking) the strength of the earth's magnetic field. It is a somewhat more intense field than usually obtains in the interpolar space or air gap in a dynamo machine or electric motor, but it is a convenient value for our present purpose.

The main body of the magnet would consist of a mass of wrought iron bent into the form of a link, and we will suppose it to be 39·37 inches or 1 metre deep—that is, 1 metre in the direction at right angles to the plane of the paper. Upon the two limbs of the mass, I have represented 17 turns of copper bar, wound on helically. The iron mass is not a continuous loop, there is an air gap ·79 inch or 2 centimetres wide. If now we suppose the copper coils upon this mass of iron to be also connected with a supply source, and that a current of 1000 amperes is thereby sent through them, the result would be that a magnetic flux would be produced through the iron mass and across the air gap of a density or a strength of about 10,000 C.G.S. units. That is to say, the magnetic field in air gap, or interpolar space, would be rather more than

Digitized by Google

20,000 times as strong as the earth's magnetic field, which is a little under 0·5 C.G.S. units in this part of the world. If our metre bar carrying 1000 amperes were placed in this space as represented in the diagram, it would be acted on by a force of 10^8 dynes, which is equal to about 224 pounds, in a direction at right angles to its length, as indicated by the arrow. *The force would be independent of the velocity or direction of movement of the bar, so long as the conditions were maintained.* The reversal of direction either of the current or of the magnetic field would reverse the direction of the force. It is upon the interaction between a conductor carrying an electric current, and a powerful magnetic field produced by an electro-magnet, such as I have exampled, that an electric motor depends for its driving force. As I have before said, the force is proportional to the product of the length of the bar L, by the intensity of the magnetic field I, by the strength of the current C. Thus, if C is in amperes, I in C.G.S. units, and L in C.G.S. units—that is, centimetres—

$$\frac{C \times I \times L}{10} = \text{force in dynes.}$$

$$\frac{1000 \times 10{,}000 \times 100}{10} = 10^8 \text{ dynes; or}$$

$$\frac{1000 \times 10{,}000 \times 100 \times 2{\cdot}2}{10 \times 981 \times 1000} = 224 \text{ pounds.}^*$$

A motor in which the driving bars were of this size would be a large one as electro-motors go at present; and the current I have spoken of, 1000 amperes, is a large one. Such a motor having such a current in the bars and their connections forming what we should call the armature circuit, would, if the supply pressure were 100 volts (a common figure for low pressure supply) deliver about 230 horse power, and consume energy at the rate of about 205 Board of Trade units per hour.†

* "Pounds" is here used as a contraction of the expression, "force equal to the weight of a pound."

† The current in the armature conductors of any two pole dynamo machine, whether as motor or generator, is half the total current passing. Hence the motor with 1000 amperes in its conductors would take a total of 2000 amperes, not reckoning the current required for exciting the magnets, which might be about 50 amperes.

Digitized by Google

There is no absolute limit to the force which this bar could be caused to exert by increasing the strength of the current flowing through it, and the intensity of the magnetic field—for all practical purposes the limit of the latter is reached at about double the intensity we have assumed or 20,000 units; but the current could be increased *ad lib.*, and the bar caused thereby to tear itself from any supports that could be devised. But in practice the force I have given—*i.e.*, 224 pounds—is, roughly speaking, about the force which such a bar would be designed to exert in an economical motor when moderately loaded.

I will now ask you to glance briefly at the two distinct conditions under which energy of motion can be produced by a bar or wire carrying an electric current in a magnetic field.

I have said that a conductor 39·37 inches or 1 metre long, carrying 1000 amperes in a magnetic field of 10,000 C.G.S. units, would exert a force equal to about 224 pounds, which force would react upon the electro-magnet producing the magnetic field. If we allowed the bar to move at the rate of 100 feet per minute, it would do work at the rate of 22·500 foot-pounds per minute, or about $\frac{2}{3}$ H.P.; and, if we allowed it to move at 200 feet per minute, it would do work at the rate of 44·500 foot-pounds per minute, or $1\frac{1}{3}$ H.P., and so on; while if it were fixed so as merely to exert a static force, it would do no work at all. Taking the last condition first—*i.e.*, that in which the conductor is fixed—the electric pressure or voltage required to produce 1000 amperes through the bar, and which would have to be supplied from the source from which the current was derived would be very small indeed, about 0·025 volts, and merely due to the inherent resistance of the bar to the flow of the electric current. If now, however, we allowed the bar to move, its own motion in the magnetic field would create a back pressure against the supply current driving it, consequently more pressure would have to be forthcoming from the source of supply if the current of 1000 amperes and force of 224 pounds were to be maintained. The inexorable law of the conservation of energy is of course herein fulfilled. The back pressure created in the conductor per unit of

Digitized by Google

length would be doubled if the velocity of the bar were to be allowed to double, and would in fact be proportional to the velocity. These are the conditions which obtain in what is known as the constant current system; in which system the pressure of supply is automatically varied, so as to keep the current constant under all normal demands.

The characteristic features with a constant current would be:— 1, The force acting on the bar would be independent of the velocity at which it moved, and in fact would be constant; 2, The work done would be proportional to the velocity at which the bar moved; 3, The varying factor in the supply would be the pressure or voltage.

The second condition is that under which a constant pressure or voltage is maintained at the two ends of the bar, instead of a constant current being maintained through it, as in the first condition. This second is the condition which most frequently obtains in practice. It is characteristic of the constant pressure system, and this is the system upon which electric energy is almost always distributed for lighting purposes, unless for arc lighting.

The electro-magnet represented in Fig. 1 would be adapted for the constant current experiment, and would be termed by an electrician a "series" magnet. For the hypothetical experiment we are now about to consider it would be better to use a magnet such as is represented in Fig. 2. Instead of the heavy copper coils, two bobbins are represented upon the magnet limbs. If these bobbins were wound with double cotton covered high conductivity copper wire of No. 11 S.W.G., and the ends connected one to either terminal of a constant pressure supply of 100 volts pressure, the magnetic field produced in the air gap would be approximately the same as that produced by the 17 turns of bar, with 1000 amperes flowing through it, in the first experiment. When an electro-magnet is excited by a small independent current caused by maintaining a constant difference of pressure between the two ends of the exciting coils, it is called a "shunt" magnet; when by passing the main or working current through its exciting coils, it is

Digitized by Google

termed a "series" magnet; and when both methods are used in conjunction the magnet is said to be "compounded."

To proceed now with our second hypothetical experiment, using a shunt magnet, as represented in Fig. 2. Under normal conditions, if the bar were stationary, there would be no back pressure generated in it, and only the inherent resistance of the metallic conductor would limit the current which would flow if a difference of pressure were maintained between the two ends. The back pressure which would be generated in our motor bar when moving at the rate of 100 feet per minute, in a magnetic field of 10,000 C.G.S. units, would be

$\frac{L \times I \times V}{10^8}$ = volts, where V is the velocity in centimetres per second.

As 100 feet per minute $= \frac{100 \times 30{\cdot}48}{60} = 50{\cdot}8$ centimetres per second.

$\frac{100 \times 10{,}000 \times 100 \times 30{\cdot}48}{10^8 \times 60} = 0{\cdot}508$ volt;

and the corollary of this is that if we maintain a difference of electric pressure between the two ends a little in excess of this, the bar would be propelled through the magnetic field at the speed of 100 feet per minute. This would be a difficult experiment to make just in this form, because the bar would get out of the magnetic field in such a short time; but let us suppose that it could move a considerable distance without getting out of the field. As I have said, it would be propelled at the velocity of about 100 feet per minute. *Through a considerable range this velocity would be maintained nearly independently of friction or any retarding force to which the bar might be subjected.* This is an important fact, and will repay examination.

The speed at which it would be propelled could not exceed 100 feet per minute, because if it did the back pressure generated in the bar would equal or exceed the supply pressure—which we are assuming to remain constant at ·508 volt—and the result would be that the current would vanish or become reversed, and with it the driving force. Of course the bar might be forcibly held stationary, but if this were done, and if the difference of pressure could be

Digitized by Google

maintained, which practically it could not, there would be a current of about 20,000 amperes through the bar, and it would exert a force of something like $2\frac{1}{2}$ tons. This approximation to constant velocity with constant pressure is due to the great increase in the driving force, which a small reduction in speed brings about. In a steam engine a similar result is of course obtained by means of a governor; but in a constant pressure or "shunt" motor it is attained automatically.

To return to the bar with a constant difference of pressure between its two ends of ·508 volt. The electrical resistance of the bar, if made of high conductivity copper, would be exceedingly small—about ·000025 ohm. Supposing it to be stationary in a magnetic field of 10,000 units, and the constant pressure of ·508 volt to be turned on. If the bar were unobstructed it would appear to start off instantly at the normal velocity of nearly 100 feet per minute instead of gradually getting up speed, the reason being that though the current would not have time to reach the value of 20,000 amperes before the motion of the bar had materially reduced the active pressure by inducing back pressure, yet the initial force would be so great as to practically amount to a blow, and would be so deftly administered as to start it just at the speed mentioned, so that the bar would appear to start off instantaneously at the ultimate speed of 100 feet per minute.

If we suppose the force required to drive the bar alone against the friction of rubbing contacts, or whatever we might devise to maintain the difference of pressure, to be say 5 pounds, the speed would be about $\frac{1}{10}$ per cent. below what it would be if there were no friction; again, the driving force would increase at the rate of (roughly speaking) 50 pounds for every 1 per cent. which the speed was reduced by compelling the bar to do work.

It will fix ideas if we go through the simple calculation of these results. The force of 5 pounds, which we assume is required to drive the bar against the friction, would be produced by a current of $\frac{5}{224} \times 1000 = 22{\cdot}2$ amperes. The amount of pressure required to

Digitized by Google

cause this current through the bar is obtained by multiplying the current by the inherent resistance of the bar which would be ·000025 ohm. We have then :—

$$22{\cdot}2 \times {\cdot}000025 = {\cdot}00055 \text{ volt.}$$

·00055 volt is required to send the current of 22·2 amperes through the bar. Now, equilibrium will only be possible when the remaining ·50745 volt of the supply pressure is opposed by an equal back pressure, and the back pressure is proportional to the velocity of the bar.

$$·508 - ·00055 = ·50745 \text{ volt ;}$$

and ·50745 volt back pressure will be produced by a velocity of $\frac{·50745}{·50800} \times 100 = 99{\cdot}89$ feet per minute, at which speed the bar would run. If now we were to cause the bar to do work at the rate of about say 20,000 foot-pounds per minute, the retarding force on the bar would be approximately 205 pounds, or allowing a little extra for friction, say 207·5 pounds. The current required to exert this force would be $\frac{207{\cdot}5}{224} \times 1000 = 927$ amperes.

$$927 \times {\cdot}000025 = {\cdot}023 \text{ volt,}$$

which would be required to cause the current of 927 amperes to flow through the conductor. This gives us a balance of 0·485 volt to be opposed by back pressure, and this amount of back pressure would be generated in the bar when running at a velocity of $\frac{0{\cdot}485}{0{\cdot}508} \times 100 = 95{\cdot}7$ feet per minute, at which speed the bar would run when doing work at the rate of 20,000 foot pounds per minute.

To make the calculations strictly accurate, the rise of temperature of the bar caused by the current, and the disturbance which the current would cause in the magnetic field would have to be taken into account; but the results obtained are sufficiently near the truth for our purpose.

The characteristic features with the constant pressure would be— 1. The speed of the bar would be maintained nearly constant under normal loads ; 2. The work done would be proportional to the load ; 3. The varying factor in the supply would be the current.

Digitized by Google

THE REVERSIBILITY OF THE ELEMENTARY PRINCIPLE OF THE DYNAMO MACHINE.

I have mentioned that if the bar were driven in the magnetic field a back pressure, or opposing E.M.F., would be generated in it, which pressure or E M.F. would necessarily be exceeded by the supply pressure. Now, this pressure, which I have called back pressure hitherto, would be generated just the same if the bar were driven across the magnetic field by an external agency. If we were to drive the bar, then, by mechanical power, we should get a difference of electrical pressure, or an E.M.F., between its two ends, which would be capable of producing a current if suitable connections were made. This illustrates the principle of the reversibility of the dynamo machine—our heretofore motor bar is tranformed into a generator bar. To go a little further. If we were to apply a constant driving force to the bar (the equivalent of this is done when a constant current generator is driven by an uncontrolled steam engine supplied with steam at constant pressure), the conditions would be such that through a considerable range the current generated in the bar would be nearly independent of the resistance or back pressure opposed to it, the speed at which the bar was propelled varying so as to produce this result.

For suppose the resistance or the back pressure, or both, opposed to the pressure generated in the bar were to be suddenly increased; the result would be a momentary diminution in the strength of the current: this would mean a corresponding decrease in the force which the driven bar opposed to the constant driving force. The velocity of the bar would consequently be increased, and with it the pressure generated and current in the system, until equilibrium was again restored, which would be when the current had reached its former value. By the reverse process the current would be brought back to its normal value if momentary increase were caused by reduction of the resistance, or the back pressure, or both.

Thus, if suitable low resistance connections were made between the bar driven by a constant force, and a second similar bar—located, of course, between the poles of a similar magnet—there

Digitized by Google

would be a practically constant current driven through the two bars, so that the constant driving force applied to the one would be transmitted to the second, which we may call the motor bar. This is typical of the transmission of power by what is known as the constant current system.

Again, suppose one bar to be driven by mechanical power at a constant speed; in this case the pressure generated would be constant, and the mechanically driven bar would then become a source of constant electric pressure, so that if this bar, mechanically driven at a constant speed in a powerful magnetic field, were suitably connected with low resistance conductor to a second similar bar, the second bar would be driven, at a nearly constant speed, in the manner I have described. This illustrates the principle upon which the transmission of power on the constant pressure system, in which a constant speed is maintained at all loads, depends.

THE DYNAMO MACHINE AS A MOTOR.

The obvious mode of constructing a motor depending for its action upon the elementary forces we have been considering, is to fix the driving bars or wires upon the periphery of a wheel or drum or cylinder, and to so arrange them and their connections that the forces they exert shall combine to turn such wheel or drum; and further, to so arrange the whole that the rotation shall not relieve the force (so to speak), so that a constant torque is applied to the shaft. This wheel or drum, with its driving wires (for in small machines the driving bars are merely wires), or its bars and their connections and mountings, form what is called the "armature" of the motor. Many different forms of armatures have been devised, all depending upon the same principles for their action; but I shall confine myself to the two forms mostly in use in this country—*i.e.*, *ring* armatures and *drum* armatures. The essential difference between the two types is this: in a ring armature the connections between the driving wires or bars are taken through the centre of the core, which is a hollow cylinder; in a drum armature the con-

Digitized by Google

nections between the driving wires or bars are taken across the ends, and there are no connections through the centre.

The drum or ring, as the case may be, upon which the driving bars or wires are mounted, is built up of thin iron discs, with a thin sheet of insulating material between each. It is called the "core" of the armature. If the core were solid, instead of being built up of discs, or laminated in a direction at right angles to the shaft, it would have very powerful electric currents induced in it, caused by the same action which induces the back pressure in the driving bars, and this would result in great loss of energy, and heating of the core. A motor of any size with a solid core would be absolutely worthless from this cause.

The driving bars or wires are constituted by the portions of the "winding," as it is termed, of the armature which cover the periphery,* and may not be separate bars at all; but whether the conducting circuit or "winding" of the armature is composed of wire wound continuously on, or whether made up of separate bars, such as these I hold in my hand, the primary force which drives the motor is exerted against the core—or against driving pins specially provided—by the wires or bars which cover the periphery of the armature; the force reacting upon the field magnets—which could thus be made to revolve in place of the armature.

Fig. 3 is a diagramatic representation of a ring armature dynamo machine as a motor. The shaft is not shown. A is the core, B B is the "winding," which consists of the parts, b_1, b_1, which lie on the periphery and which exert the driving force, and the parts, b_2, b_2 which serve to connect the driving bars or wires in the required manner. D D are connections made with the winding at intervals which terminate in segmental bars, C C, which form what is called the commutator, upon which the brushes, E+ E—, rest. F+ F— are the supply mains. Suppose the current to flow through the

* In some forms of ring armature machines the magnet poles are in juxtaposition to the sides, or even to the inside, in addition to, or instead of, the periphery of the armature; in these cases the wires or bars on these parts of the armature core also drive.

Digitized by Google

motor as indicated by the arrows;* it traverses the brush, E+, and enters the armature through the commutator bar, C+, and its connection, D+; on reaching the winding it divides, one-half the total going each way round, until the two parts meet again at connection, D—, whence the current flows out at E—. G G represent the massive electro-magnet, between the curved polar surfaces of which and the armature core is the air space, or interpolar space, in which the conductors move, and where the intense magnetic field prevails when the field magnets are excited by the current through their exciting coils. The path of the magnetic flux is indicated by the dark lines, which are marked with the letters N and S, to indicate the direction of the flow. The magnetic flux flows from the mass of the magnet across the air space, through the laminated mass of iron, A, forming the armature core, across the second air space, back into the mass of the magnet, and round through the limbs and yoke (as the end piece is called), so forming a continuous loop or circuit.

The direction of the current in the peripheral or driving wires or bars, is opposite over one-half of the armature to that over the other half; but it will be seen from the diagram (Fig. 3) that the direction of the magnetic field in which they lie is the same, therefore the force impressed by one-half of the driving bars is opposite in direction to that impressed over the other half, so that a rotational torque is applied to the core, and through it and its mountings, to the shaft.

By means of the commutator, C, which revolves with the armature while the brushes, E+ E—, remain stationary, the direction of the current in the driving bars and their connections is reversed as the rotation proceeds, so that the direction of the current in all the bars which are in one air space is always opposite to the direction in the other air space.

* I may here remark that the same quantity of electricity—the same current, we may say, leaves the motor as enters it, just as the same quantity of water flows away from a turbine as enters it. The electric current, whether it is merely the manifestation of molecular motion, or whether it is material in motion, is only the vehicle of energy. It does not disappear when it delivers up energy, any more than a driving rope or band does.

Digitized by Google

This reversal is effected while the driving bars are passing through the two neutral or non-effective parts of their path between the poles of the large magnet, G, so the torque is quite constant, and a perfectly even and constant speed can be obtained, with an electric motor, without the use of a fly-wheel. The armature, it is true, has considerable inertia, but this is not called into requisition to maintain a constant torque upon the shaft, as is the fly-wheel of a steam engine.

The reversal of the current in the sections of the armature winding between any two commutator connections, D D, takes an appreciable time, owing to the phenomena of self-induction.* For this cause the manner in which the reversal of the armature sections is to be effected is one of the vital points to consider in designing an electric motor; almost, if not quite, as vital a point as is the reversal of the direction of motion of the connecting rod and piston, etc., of a high speed steam engine.

If this reversal is effected merely by the crank instead of by cushioning, and by giving "lead" to the slide valve, so as to arrest and restart the piston, etc., and so effect the reversal of the motion, by the steam independently of the action of the crank, the engine will soon knock itself to pieces, though the fitting be never so perfect, and all slackness and play got rid of. There is a wonderfully perfect analogy between this problem in steam engine design, and that of effecting the reversal of the current in the armature sections of an electric motor.

If this is done merely by the make and break action of the

---

* The phenomenon of self-induction in an electric circuit is analagous to that of inertia in mechanics. An electric current cannot be instantaneously started at a given strength, or instantaneously stopped after it has been started, any more than a body can be instantaneously started in motion at a given velocity, or instantaneously arrested after starting. The self-induction of a wire or conductor forming an electric circuit, however, is an extremely variable quantity, depending more upon the environment of the wire or conductor than upon the wire or conductor itself. The self-induction of an armature section varies in different parts of its path, but always has a high value due to the proximity of iron.

Digitized by Google

brushes in sliding over the commutator sections, it is done as it were violently, and sparking and rapid destruction of both commutator and brushes is the result. Curiously enough, if certain factors have been duly regarded in the design of the machine, all that it is necessary to do in order to get rid of the sparking, is to give the brushes a "lead" (just as the engine slide valve requires to have a "lead" over the crank), so that the reversal takes place a little to one side instead of just at the neutral point. The direction of lead is *opposite* to the direction of rotation in a machine running as a motor—*in* the direction of rotation in one running as a generator.

When the proper lead is given, the reversal takes place at a point found by trial when the armature section is in the fringe of the magnetic field through which it has just passed, *i.e.*, when it is leaving one of the air spaces (in the case of a motor). At this point the current in the section is brought to zero, and started in the opposite direction, to just the right strength by the back pressure (which we have seen is generated in the driving bars of a motor) independently, as it were, of the commutator. Thus the commutator and brushes must be designed and adjusted, not to cause the reversal of the sections by making and breaking the connection with the main, but so as to allow the reversal to be performed by the action of the magnetic field upon the section, and the winding and field magnets of the machine must be so proportioned and designed as to cause this reversal to be effected during the time that the commutator bars of the section are passing under the brushes.

THE DYNAMO MACHINE AS A GENERATOR.

In writing the present paper, it seemed to me to be better to describe the dynamo machine in the first instance as a motor, and having now attempted to do so, the transition to the consideration of it as a generator is very simple. Imagine the direction of the current and the polarity of the magnets to remain as shown in Fig. 3, but that instead of electric energy being supplied through the

Digitized by Google

mains F+, F—, the armature is driven by mechanical power against the forces indicated by the curved arrows on the periphery: the dynamo then becomes a generator. The brushes would bear upon the commutator in the same position as that for a motor, but as the direction of rotation is reversed, the slope of the brushes would have to be reversed also.

Again, suppose the supply of electric energy to be cut off, and the rotation of the armature maintained by mechanical power; the result would be that the pressure, which in the case of a motor acts against the electric supply or driving current, would now be available to produce a supply current, and the dynamo thus become a generator. In this case the slope of the brushes would remain unaltered, but they would require moving to the position on the opposite side of the centre line, indicated by θ. It will be noted that what I have termed the driving bars now become the driven bars; and they are, if I may so speak, still the vital part of the armature—the part to which the mechanical power has to be transmitted to the shaft, and the part in which the mechanical power or energy of motion disappears, and the electric energy appears.

A recent refinement in the construction of armature bars is that introduced by Messrs Crompton & Co. in their larger machines, and consists in making the bars of a twisted strand of copper wires, which are forced by hydraulic pressure into a mould of rectangular section, so as to make a mass almost equal to the density of solid copper by flattening each wire against its neighbour. This construction has led to considerable improvement in the efficiency, and at the sametime to reduced heating of smooth core armatures.

The explanation of this result is as follows:—While a conductor, or copper bar, is moving in an uniform magnetic field; as, for instance, in the centre of the air space, Fig. 1, the electric pressure, or E.M.F., generated in it is the same between any two right angle planes in the section of the bar, that is, there is an uniform tendency for a current to flow from one end of the conductor to the other. When, however, one part of the conductor in

Digitized by Google

its sideway motion reaches into, say, a weaker part of the field—as when the bar, Fig. 1, should have moved so as to protrude partly from the air space—a lesser pressure will be generated in the part in the weaker field; that is, there will be a greater pressure along one side of the bar than along the other, with the result that a reverse current will flow in the part of the bar which is in the weaker field, and an augmented current in the part which is still in the stronger part of the field. This current will consume energy which will appear in the form of heat in the bar. Now the reverse current must cross from the high pressure to the low pressure side of the bar, and in doing so it will have to pass from one wire to the other in the case of the compressed wire bar, and not only will it have to cross from one side to the other, but on account of the twist of the strand, this reversed current will be continually changing from one wire to another, because it will necessarily flow through the low pressure side of the bar. Now, although the electrical resistance through the contact surface between one wire and its neighbour might not strike one as being very great, probably the surfaces in actual contact at any moment are only a fraction of the whole; and, at any rate, in reality the resistance is enormous as compared with the resistance through solid metal, and these wasteful currents are reduced to a minimum, and practically got rid of.

I am indebted to Messrs Crompton & Co., who have been good enough to send me these bars to show you to-night.*

I may say further that when the bars or driving wires are put into slots cut in the iron core of the armature—a practice which is steadily coming into vogue—the advantage gained from making the bars in this way disappears, on account of the fact that the magnetic field in a deep slot cut in wrought-iron is sensibly constant, and a

* The bars shown measured about 0·24 × 0·28 inch in cross section, and were about 13½ inches long in the useful part of their length. They would be capable of carrying from 60 to 120 or more amperes, and in a field of 5000 C.G.S. units (a usual figure) would exert a force of about 2½ pounds with 60 amperes, and 5 pounds with 120 amperes, and so on.

Digitized by Google

bar which is embedded in such a slot, therefore, cannot have a difference of pressure between its two sides.

I shall conclude my paper by giving the chief characteristic features of:—I., Constant current or "series" motors; II., Constant pressure or "shunt" motors; and, in doing so, I shall touch upon one or two points which it is very important to know in practice:—

CONSTANT CURRENT OR "SERIES" MOTORS.

I. A constant current or series motor will maintain a constant torque at all speeds, and, in consequence, will do work in proportion to the speed at which it is allowed to run.

II. The amount of backward lead required to be given to the brushes is greater at slow speeds and less at high speeds.

III. A constant current motor will suffer no harm from being brought to a standstill from a mechanical cause external to the motor, unless the damage is caused from the shock of suddenly arrested motion.

IV. A series motor, if properly designed for the pressure, may be run from constant pressure supply. Under these conditions it will neither maintain a constant torque nor a constant speed with varying load. If, however, the load is constant, or nearly so, a series motor may often be advantageously used when the supply is a constant pressure one.

CONSTANT PRESSURE OR "SHUNT" MOTORS.

I. A shunt motor will run at a nearly constant speed for all loads. It may be compounded so as to run practically constant.

II. The amount of backward lead required to be given to the brushes is least with no load, and increases as the load increases.

III. The speed cannot be varied, unless through a small range, while maintaining the efficiency of the motor.

Digitized by Google

IV. In starting a shunt motor from a constant pressure supply the connections must be made in the following order: 1st, the shunt or magnet wires must be connected to the mains so as to excite the magnets; 2nd, the armature circuit or brushes should be connected first through a resistance coil, which can be cut out of circuit when a moderate speed has been attained. If the first rule were not complied with, and the armature circuit "switched" on before the magnet circuit, the result would be that a dangerously heavy current would flow through the armature winding, while exerting very little torque, due to the non-existence of the necessary magnetic field in the air space, and the brushes and commutator might be burned and damaged. If the second rule were not complied with, the result would be that a very heavy current would flow, until the speed and consequent back pressure checked it, and the shock to the armature, due to the abnormally heavy torque which would be suddenly applied, might be sufficient to destroy it. In practice the starting switch is designed so as to make the connections in the order given—a suitable resistance being arranged in connection with the switch. The connection to the supply is made through short lengths of fusible metal, the cross section of which is such that if the current exceeds a predetermined value the heat generated will fuse the metal and disconnect the motor from the mains. These "fuses," as they are called, secure a perfect safeguard against damage to motor in either of the ways mentioned, and they should always be used.

Digitized by Google

The discussion on this paper took place on April 26th, 1892.

Mr SAYERS said that before the discussion commenced he would like to supply an omission which he had made when he read the paper, which was to acknowledge his indebtedness to Messrs Mavor and Coulson for their kindness in supplying the armature and one or two other things exhibited.

Professor JAMIESON said this paper had been expressly written for the benefit of mechanical engineers. He had to confess that it had not made the subject of the dynamo machine as a motor clearer to him.

Mr F. J. ROWAN said that his feeling on glancing through the paper was that it was addressed much more specially to the electrical experts than to the mechanical engineers. It was interesting, and, as far as he could judge by hastily reading it, gives a clear account of the principles that are involved in the construction of electrical motors. Beyond that he had nothing to say but that he took exception to Mr Sayers' summary of the papers which have been previously read here, because he was in the unhappy position of being one of the authors to whom Mr Sayers referred at the commencement of his paper—those unfortunate beings who have presented to the Institution papers of two classes, papers which are either severely technical or papers which are so superficial as not to possess any practical importance at all. He could not suppose he was in the first class, and therefore he felt rather unwilling to be relegated to the second class.

Mr M'WHIRTER said there was not much in the paper for electrical engineers to discuss, and he must take the view that Professor Jamieson had taken, that it was altogether directed to the non-technical members of the Institution. Mr Sayers lays great stress upon the fact that until engineers get to know more about electric motors they will be very shy to adopt them. He quite agreed with him there, although as to whether he had made the subject very much clearer he would not like to give an opinion. Mr Sayers is always very strong upon the necessity for using C.G.S. units. In this paper he has departed from this. He mixes up

Digitized by Google

his dynes, pounds, seconds, and feet in a most wonderful manner. Mr Sayers' description is, however, thoroughly accurate, but he (Mr M'Whirter) could not agree with him in placing it in such a manner before a non-technical audience.

Mr SINCLAIR COUPER said his experience of electrical motors in Moorepark works is that they had to get the men used to electricity. It is a new power, and the men are not accustomed to it as they are to motors driven by belting. They were making extensive use of it for drilling purposes. He thought there was a wide field for the electric motor in the engineering and mechanical world, and in the Glasgow district the number of electric motors that have been used is now very considerable, and they have made a complete revolution in places where shafting could not very well be put up.

Mr SAYERS, in reply, said he should like to say first of all that undoubtedly the paper was addressed to mechanical engineers, and it was not intended for electrical engineers. It was simply an endeavour to put the subject in a mechanical way, so as to show where and how the mechanical force is derived from the electric force, and then to show how it is applied to a machine. With regard to the use of the C.G.S. system, he did not think that there was any mixture in the paper. Looking at the figures, and those first of all on page 202, he gave the force first in dynes, but he knew that force in dynes to a great number of engineers means very little, and that they want to know the force in pounds before any concrete quantity is brought before their minds. Therefore, he transformed it into pounds. While workmen are not all familiar with the C.G.S. system, it is necessary for practical purposes to transform the metric measurements into ordinary English measurements.

The PRESIDENT said they were indebted to Mr Sayers for bringing this paper before them. It was rather unfortunate that the paper could not have been discussed at the former meeting instead of being left over to the last meeting of the session, when there is so little time to do it justice. He would now propose a very hearty vote of thanks to Mr Sayers for his paper.

The vote was heartily accorded.

Digitized by Google

Digitized by Google

A New System of Electrical Distribution and Transmission.

By Mr RANKIN KENNEDY.

(SEE PLATES VII. AND VIII.)

Received and Read 22nd March, 1892.

THE art of distributing electrical energy for general consumption over cities and towns is at the present time undergoing great developments, but cannot be said to have arrived at that stage at which electrical engineers can agree upon one system, or common practice. Hence, in practice, we have many diverse systems. In some towns electrical energy is distributed by what is known as the low pressure continuous current system; in other towns the system is that known as the alternating current high pressure system; in some towns both systems are in use.

To-night I wish to bring before your notice a new system, which has been called the duplex system, in which the electrical energy is distributed by two currents alternating in different phases—a system which supplies electrical energy for electromotive power; for electric lighting, heating, electrotyping; and any other purposes for which electricity is used.

In any comprehensive scheme for distributing electrical energy for sale in towns or cities, the following conditions govern the supply:—

1st, The supply to consumers must be absolutely safe.

2nd, The supply should be available at all times, at any place in the city or town, and for any purpose to which electricity can be applied.

Digitized by Google

3rd, The generating machinery and plant must be all together at one place, under one control.

4th, The supply should be available at the most distant districts of the city or town.

Now, in an electrical distribution works there are three departments :—

1st, The generating department, comprising buildings, boilers, engines, dynamo electric generators and regulators; here the electricity may be said to be manufactured out of the raw material—coal.

2nd, The distributing department, comprising main conducting wires, and branch wires for carrying and distributing the electricity to the consumers.

3rd, The consuming department, comprising electric lamps, electromotors, and other appliances in which the energy of the electricity is expended or converted.

We need not enter into any general considerations concerning the generating department; but, regarding the distributing department, it may be explained that therein lies the difference between the various systems, and I shall here for a few minutes briefly touch upon the laws relating to conductors of electricity. The units in which electricity is measured are—the volt is the unit of pressure, the ampere the unit of current, the ohm the unit of resistance; the number of amperes a wire of a given sectional area can carry is limited; the more amperes passed through a wire, the more electrical energy is lost in heating the wire, and this loss rises rapidly as we increase the current, and it also rises directly as the length of the wire.

Now, although the amount of current which can be carried in any wire is limited, yet the electrical energy which any wire can carry is unlimited, except by practical difficulties in the way of perfect insulation.

The energy conveyed by a wire is equal to the current, C, multi-

Digitized by Google

plied by the pressure, E, and insulation alone limits the pressure; hence, with a very small wire, a very great amount of electrical energy can be carried by a very small current, if the pressure is made very high. The amount of energy carried by a current is equal to $E \times C = W$, or electrical energy. Now, suppose we have a wire of one-tenth of a square inch in area and one mile long, its resistance 0·5 ohms, to carry 100 amperes current; if we multiply the resistance of this wire by the current strength, $\cdot 5 \times 100 = 50$ volts, that gives us the pressure required to push the 100 amperes through this mile of wire—in fact, it is the difference of pressure between the two ends of the wire, a fall of 50 volts; the wire is joined to a generating dynamo at one end, and to 200 = 100 volt lamps at the other end half a mile away; now, to get 100 volts at the lamps, we want (100 V + 50 = 150), 100 for the lamps, and 50 for 1 mile of wire, so that we see that one-third of the pressure is lost in the wire alone in this case. This example shows clearly the loss of pressure in long conductors, and how serious the loss is with low pressures, being a third of the whole pressure; but these are not all the difficulties in working at low pressures. Suppose there are consumers at different parts of the wire, some nearer the dynamo and some farther away, it is obvious they shall each get a supply at different pressures and at variable pressures. Now, allow me to take another illustration. The pressure at the dynamo was 150 volts, at the lamps 100 volts; now, suppose we make the pressure at the dynamo 10 times greater, in this case we would have 1500 volts pressure at the dynamo end. By keeping the current the same, 100 amperes, the loss of pressure in the wires would not be greater than it was when the dynamo pressure was only 150 volts—that is, it would still be 50 volts—we would therefore find 1450 volts at the distant end. Now, 100 amperes at a pressure of 1450 volts would give energy sufficient to supply 2900-50 watt incandescent lamps, and the loss in transmission is now only 50 volts = 3 per cent. of the whole. To put the matter briefly, with low pressure of 150 volts we can transmit power for 200 lamps to half mile distance with a loss of 30 per cent.; with a moderately high pressure

Digitized by Google

of 1500 volts we can transmit power for 2900 lamps, half mile distant, with a loss of only 3 per cent., using the same copper conductors in each case. If we work at low pressures, we must either have big losses in the wires, or thick wires. These facts and figures are, I admit, quite schoolboy knowledge now-a-days; but I wish to ground my arguments on the simplest facts, and these simple facts and figures govern the whole question of high *v.* low pressure electrical distribution.

Now, to save weight in the copper main conductors, it is obvious high pressures must be used; but, for safety to the consumer, and for working lamps in single parallel, the pressure is restricted to 100 volts, so that if we use high pressure in the mains, we must reduce the pressures before delivery to the consumer; this is a most important point, and on it turns the whole question—continuous *v.* alternating currents.

The continuous current systems are worked at a low pressure, for the simple reason that if at a high pressure it is a very difficult and expensive process to reduce to any other pressure; whereas, with alternating currents, the pressures can be cheaply, easily, and with certainty reduced, increased, or varied as you please. Hence alternating current systems are always on the high pressure system, and the high pressure is reduced to any other pressure by a simple apparatus called a transformer.

For these reasons the high pressure alternating current system has been adopted to a much larger extent, all over the world, than the low pressure continuous current system.

But the simple alternating current systems do not entirely meet the requirements. A simple alternating current cannot be converted into continuous currents, for which there is always a demand, except by an expensive and difficult process. It cannot charge accumulators, and it has not hitherto been very successful in driving electromotors.

At the present moment the state of the art of electrical distribution is this. We know that at high pressures very great amounts of electrical energy can be transmitted over long distances with no

Digitized by Google

serious losses. We know that alternating currents can be transformed from high to low pressure, or from low to high pressure, just as we require them. A continuous current cannot be so transformed without moving machinery of an objectionable nature; therefore the operations of continuous currents are confined to low pressure work.

The simple alternating current systems now in use are quite satisfactory in so far as they supply electricity for lighting purposes only, but if only lighting can be successfully carried on by them, then it is obvious their sphere of usefulness is very limited.

Electricity in continuous currents can be used for every purpose to which electricity can be applied, but it cannot easily be transformed in pressure.

In this new system, which I shall endeavour to make clearly understood in this paper, the object is to combine the four essentials for a universally useful and extensive scheme of electrical distribution.

The four essentials are:—

1st, High pressure to carry the electricity long distances without losses.

2nd, Alternating currents easily and safely transformed.

3rd, Low pressure for distribution of electricity to consumers.

4th, Continuous current supply derived from the high pressure distribution main wires.

These are the features of this new system. Referring to Fig. 1, (Plate VII.), a sketch map of Glasgow, the central or generating plant is supposed to be stationed down about Yorkhill. Sub-stations for the supply to the various districts of the city are marked off as at Partick, City, St. Rollox, Bridgeton, Govan, and Tradeston. All these sub-stations draw their supplies of electricity through main wires, marked red in map, at high pressure. The electricity is then reduced to low pressure, and distributed to consumer either as a continuous current or as an alternating current.

The high pressure feeders for the sub-stations are three wires

Digitized by Google

carrying the electricity in two alternating currents. It is to be borne in mind that only these feeders are high pressure—on this system the sub-stations supply low pressure only, except to large consumers, these being treated as separate sub-stations.

Now, to enable us at the sub-stations to derive low pressure alternating currents, or low pressure continuous currents, from the high pressure feeders, it is necessary to use two phase alternating currents, currents differing in phase by a quarter of a period of alternation.

These can be combined to form a simple alternating current, and they can be converted into a practically continuous current.

The two currents are rectified into unidirection currents, and these can be used together or separately, either as one continuous current or one alternating current. Referring to Fig. 2, Plate VII., the curved lines show us the various types of alternating currents.

A is a simple alternating current; B, same rectified; CE, two currents in quadrature; D, resultant line; CE, same rectified; D, resultant.

The frequency of an alternating current is the number of ⌒⌣, complete waves, per second.

The transformer for alternating currents is a very simple arrangement, which, besides converting the current from high to low pressure, effectually cuts off the consumers from all connection with the high pressure system, as shown by experiment.

The rectifying commutators are driven by a synchronising alternating current motor, now before me, and which is shown in Plate VII., Fig. 4. NS, in sectional rear, is an ironclad alternator, having all the N Poles at one side and all the S poles at the other side, all excited by one coil. The armature has two circuits, connected to a starting commutator, *a*, with a ring contact, *b*, joined to the junction of the two armature circuits, *c*, *d*, respectively, with brushes as shown in the diagram. It is a reversed alternator. Now the starting up of synchronous motors has always been a difficulty. In this machine this difficulty has been met by using a commutator for starting up to synchronism.

Digitized by Google

This commutator is then cut out of the circuit altogether. This motor has great power, is highly efficient, and governs perfectly; the commutator flashes somewhat at starting, but only for a few moments.

It may be here explained how the two alternating currents are got which are in use to-night. There are thirty E.P.S. accumulators down stairs; the continuous current from these is converted into two alternating currents in quadrature phase by means of an electro motor—which motor is a simple two pole shunt wound dynamo reversed. The alternating currents are collected from four rings on the motor shaft. Two of these rings are connected to diametrically opposite points of the commutator of the motor, and the other two are connected to two diametrically opposite points of the commutator at right angles to the first two. This arrangement converts the battery current into two alternating currents in quadrature. The highest frequency ⌒ got by this arrangement is only about 18 per second; the E.M.F. is about 60 volts. Under these conditions the synchronous motor is sometimes a little difficult to start, as it was designed for a frequency of 80 ⌒ per second, and 100 volts pressure.

The transformer is simply an electro magnet, with two or more windings, and acts by induction. These transformers, C, D, in Fig. 3, Plate VII., receive the high pressure alternating currents at the sub-stations from high pressure wires, and reduce it to low pressure—about 100 volts or thereby. The two currents are then passed through two rectifying commutators, which can be used for charging accumulators and other purposes, and thereby are converted into two unidirection pulsating currents, *a*, *b*. (See Fig. 3, Plate VII.)

We shall now start the motor. On the end of the motor where the pulley should be placed, two commutators are fitted such as are shown in Plate VII., Fig. 3, for the purpose of rectifying the two quadrature currents, and combining them into one continuous current. (Experiment made showing this continuous current driving a small continuous current electromotor.)

Digitized by Google

We can by this means obtain continuous currents from the high pressure supply of alternating currents sent out to the sub-stations.

The supply of two alternating currents in quadrature phase is also available for working motors without commutators. Now this is a very important matter. Ordinary motors working with continuous currents, such as the little one on the table, are no doubt very perfect machines and do their work well and economically, but still there are instances in which a motor without a commutator is a very desirable thing to use.

One class of commutatorless motor is that known as Tesla's motor, and one known as Professor Feraris' motor, and another known as Bradley's motor—any of these motors can be used on this system of alternating currents. These motors are on the same principle, first discovered by Professor Feraris, and first enunciated by him. The principle is that known as the rotary polar principle.

A further development of this principle has been shown recently at the Frankfort Exhibition, in which three currents differing in phase by 120° are used to work a three phase rotary polar motor without commutators.

I have here before me two models of commutatorless motors, acting on quite different principles from those on which the rotary polar motor acts, and they are expressly designed to work with two currents in quadrature on this new system.

The first one (see Plate VII., Fig. 5) has two parts—a motor part, A, and a transformer part, B. The motor part consists of a ring or drum armature in a two pole field; the transformer part has the secondary winding on a drum with radial projections, C, each carrying a secondary coil, the two diametrically opposite secondary coils are joined in series with each other, and with one coil on the ring or drum armature of the motor part, D.

The field magnet of the motor part is excited by one of the two currents in quadrature, and the primary magnet of the transformer part is excited by the other current. The primary magnet of the transformer part induces secondary currents in the coils on the radial projections, and these induced currents energise the armature

Digitized by Google

of the motor part, and the motor field is energised by a current in quadrature with that energising the primary magnet of the transformer, so that the magnetic flow may coincide with the phase of the current in the armature of the motor.

The motor can now be started to drive a small fan; by a simple reversing key it can be stopped, started, or reversed without the slightest trouble. There is no commutator or brushes to attend to. It may be boxed up, only two oil cups to lubricate two bearings requiring any attention.

The other motor without a commutator (Fig. 10, Plate VIII.), is designed to work with this system. In this motor, as in that last described, induced currents energise the armatures, of which there are two, A and B, each having a separate field magnet, C and D. In its simplest form this model shows the construction of this motor. The fields are two pole fields, and the armatures are simple Siemens' old H girder shape form, well laminated. The two armatures are at right angles to each other on the shaft. The fields are laminated and excited, one by the one current, and the other by the other current used in this system.

Now the action of this arrangement is a little difficult to make clear, although it is very simple. The two fields being separately excited, each by one of the two currents in quadrature, one of them is always at its maximum induction when the other is at its minimum, and the two armatures being at right angles to each other, one of them is in a position to receive the maximum magnetic flow at the instant the other is in a position to receive a minimum magnetic flow. The two armature coils are coupled together to form one closed coil; under these conditions the one armature, which is under maximum induction, generates a current in its coil which also circulates in the coil of the other armature, and the direction of these currents are such as to polarise the armatures in the right direction to cause a torque continually in one direction.

In actual working machines the construction is rather different from that of this model. There are more than two poles, and the armatures have also more than two poles, being drums with

Digitized by Google

outward radial projections carrying the energising induction coils.

This motor, like the last, has no commutators nor brusher, nor sliding or sparking contacts of any kind; it only requires lubricating two journals to keep it in perfect order.

It has now been shown how in this system the electrical energy is sent out to sub-stations at high pressure, and is there transformed down to low pressure, and supplied as a continuous current, or as two pulsating currents, or as two alternating currents in quadrature. You have seen how by two commutators and two transformers the continuous current is derived, and also how the motive power is to be obtained, and the motors for the purpose, both with and without commutators. Having now given a general outline of the system and its chief apparatus, some particulars regarding the generating station and the sub-stations can now be considered.

At the generating stations the dynamos generate the two currents in quadrature. The dynamos I have designed for the purpose are shown by Figs. 6, 7, and 9, Plate VIII.

They are inductor dynamos, having no moving coils, and generate the currents at low pressure and moderately low frequency; a frequency under 40 per second being preferable where alternating currents in quadrature are to be converted into so many different forms.

These dynamos require to be double machines in order to enable them to be worked without induction in the exciting coils. The exciting coils on one half are coupled in series with those on the other half, so that the induced E.M.F. in the one opposes the induced E.M.F. in the other, and therefore there can be no current in the exciting coils due to induction. By this construction, it may be interesting to explain, that in these machines the same coils that are used for exciting the machine can be simultaneously used as the generating coils. The copper coils are marked A, B, and the laminated magnets are marked D. The revolving laminated inductors are marked C C'.

The generators are low pressure. There is, therefore, no danger

Digitized by Google

in the generating station, and the high pressure currents to deliver the energy to the sub-stations are raised to high pressure by step up transformers. The district immediately surrounding the generating station can be best supplied at low pressure direct from the generating station.

The high pressure quadrature currents are carried to the sub-stations on two wires, and have a common return wire.

At the sub-stations the high pressure currents are reduced to low pressure by two transformers, and converted into continuous current, either wholly or partly. A continuous current circuit and two quadrature alternating current circuits may be sent out at low pressure from a sub-station. At some sub-stations only two alternating currents in quadrature would suffice for all the work; at others, the continuous current alone might be sent out; and at others, again, the two pulsating unidirection currents, singly and combined, on a four wire system, can be sent out from the sub-stations. These are matters for judgment, only to be settled for each case under consideration, but all these methods are at the disposal of a supplying Corporation adopting this system.

Storage batteries can be charged at the sub-stations by the continuous current. If we refer to Figs. 2 and 3, Plate VII., this current pulsates but never falls below a fixed value. So long as the counter E.M.F. of the storage battery never exceeds this fixed value charging goes on steadily. Fig. 3 (Plate VII.) shows the arrangement of transformers and commutators for converting the two currents into one continuous current.

There is a method sometimes used for converting alternating currents into continuous currents. In this method there is used an alternating current motor, driving a continuous current generator. Such a plan is open to the objection that two very powerful machines are required. If the maximum output is for 1000 lights, then a motor of 100 horse power must be coupled to a generator of 100 horse power to do the work of conversion. Obviously this would be a very inefficient combination, especially at under loads.

In the method used on the new system a one-horse motor and

Digitized by Google

commutators would convert from 1 to 1000 horse power or more; the motor requires power sufficient to drive the commutators only.

To apply the system to steamships, where it will be found of vast advantage, only the two alternating currents in quadrature are required, and these are of low pressure—less than 100 volts—so that they are absolutely safe to touch.

In modern steamships power is distributed as a rule by steam pipes and small steam engines. In some ships over a dozen small engines are employed for various small power operations, such as pumps, fans, capstans, etc.

There is a system of distributing power by water in pipes throughout steamships which has been adopted in some steamships —Brown's system in preference to steam.

Electrical distribution of power in steamships would have advantages over both, more especially where electric light is now so common on steamers. The same plant can be used for power and lighting purposes.

Instead of steampipes led all over the ship, wires would be taken from the generator of quadrature alternating currents in the engine-room. And instead of a multiplicity of small, wasteful, and troublesome steam engines, one good compound or triple expansion engine in the engine-room driving the dynamos would do all the work, commutatorless motors being used to drive all the small powers before-mentioned throughout the ship.

Motors with commutators would, on account of the attendance required and their liability to get out of order, never be tolerated for power purposes on steamers, but given a commutatorless motor, such as those here shown, there can be no doubt of the success of power distribution in steamships by electricity. The wires transmitting the power throughout a ship are cheaper, less liable to accidents, and, if broken, are easily and quickly repaired, and these are all advantages over the steam and hydraulic transmission of power.

In mines the very same advantages exist. Most elaborate

Digitized by Google

arrangements have been proposed for boxing in the dangerous commutator to enable a common dynamo to work in mines, one proposal being to choke it in a box of poisonous gases, another to run the brushes inside the commutator.

None of these proposals are practicable. The only "perfect cure" is to abolish the commutator altogether in motors for steamships and mines, and thereby get rid of the dangerous sparks, and at the same time enable the motor to run on for long periods with no other attention than that required to fill the lubricators.

In steamships high pressures are not required at all; but in min ing work high pressure feeders can be used with a great saving in copper and electrical pressure. A transformer in a cast-iron box, and completely immersed in oil, is then used to reduce the pressure to a safe limit for working the motors and electric light in the mines.

Even the self-starting synchronising motor has this advantage over an ordinary continuous motor in a mine, that after it is started it runs without any attention to the commutators for a long period of time, the commutator being cut out after the start is made.

So long as the load on both circuits of the new system is similar and equal the phase difference is maintained at quadrature. To ensure equality of load the various consuming devices are always fed from both circuits simultaneously.

Two transformers, or one double wound transformer, is used for producing a single alternating current for lighting purposes, one transformer for each current. The primaries are connected, the one to the one circuit and the other to the other circuit, and the secondaries are connected in series with each other. I can show you this arrangement in action. (A "Sunbeam" lamp worked from two transformers in this way was exhibited.)

Before concluding, it may be well to draw attention to a little difficulty with the working of alternate currents, which, although there is a remedy, is worthy of some attention. Motors, when worked by alternating currents, act as induction coils; they take a large current, but this large current is not in step with the impressed

Digitized by Google

E.M.F., and therefore does not give the watts when it is multiplied by the pressure. This large current is compounded of two currents differing in phase by a quarter of a period; one part of this large current is in step with the pressure, and the other is an exciting current, or magnetising current, which lags a quarter of a period. This lagging current is not produced by the dynamos at the central generating station, but is produced by the self-induction of the motors, and is thereby drawn through the dynamos, and is at its maximum value when the E.M.F. of the dynamo is at a minimum.

These large currents, compounded of an active current and a lagging current, do not represent correspondingly large powers, but carrying capacity has to be provided for them in the generators.

Mr James Swinburne has devised a method of using electrical condensers, whereby the troubles due to these magnetising currents are entirely obviated, and the lagging currents are drawn from the condensers instead of through the dynamos.

In conclusion it may be pointed out that the simple alternating current high pressure system has actually made more progress in the actual work of distribution of electricity commercially than has the low pressure continuous current, even with all its deficiency, and even although the continuous current system had about ten years of a clear start ahead of the alternating current system. The following figures as to the systems are given in the *Electrician*, 1st January, 1892:—

Alternating current,	...	500,000 approximate.
Continuous current,	...	400,000 „

Even in Glasgow the high pressure alternating current system has for some time, and is now, successfully distributing electricity publicly in a manner which could not possibly be carried out by continuous current at low pressure.

From these considerations I conclude that if the simple alternating current system can successfully compete with the older continuous current system, then an improved and more highly

Digitized by Google

developed system of alternating current working should make electrical distribution for power and light, and all other purposes, still more practical and profitable undertakings. Briefly described, this new system consists in generating the electrical energy at a central station, from which it is distributed at high pressure in the form of two alternating currents in quadrature phase, these currents being delivered to sub-stations, from whence, after being converted, the electrical energy is delivered as low pressure continuous currents, or as low pressure alternating currents, to the consumers surrounding the sub-stations.

It is claimed for this system that it offers all the advantages of the continuous current systems, together with all the advantages of high pressure alternating current systems, and some advantages peculiar to itself such as commutatorless motors.

Then in regard to cost of working, there are many examples of generating stations working, from which it can be proved that supplying sub-stations from one common generating plant is most economical. The number of engines and dynamos running at any time being kept equal to the load, never over-loaded and not under-loaded.

In this paper only a general outline of the system could be given, the time at disposal being too short for minute details, but a paper dealing with the system as applied to steamships and mining work, is to be offered for reading at some future meeting: in that paper details shall be gone into fully.

The discussion on this paper took place on April 26th, 1892.

Professor JAMIESON said he thought that they would all agree with him that this was one of the most interesting papers on any electrical subject that had been brought before this Society. Not only was the paper very fully illustrated, but Mr Kennedy had gone to a great deal of trouble and expense to bring before them a large quantity of entirely novel machinery, and to show

Digitized by Google

the same at work under as practical conditions as the circumstances would permit of. He was, however, disappointed in reading over the paper to find that Mr Kennedy had left out some things of interest which had been mentioned by him at their former meeting. They were all delighted with the clever manner in which he had devised a commutatorless motor, which could be used in fiery mines, or in other such dangerous places, and where hitherto electrical engineers had of necessity to enclose their commutators in gas or at least in dust tight casings. They would all agree with Mr Kennedy that from *one* point of view they should have but one large central station for the supply of a large district, just as they had one large gas works, if they were authorised to distribute electrical energy to all the various parts of a town and its suburbs. Further, they could not help acknowledging that his method of distribution of electrical energy was one of the best that had been proposed; since, in the first place, he generates alternate currents of *low* pressure by his dynamos (so that there cannot be any danger to those in charge of the central station); in the second place, he transforms these currents into others of very *high* pressure, transmitting them along small conductors, with a minimum loss of power, to various centres; and then, in the third place, he retransforms the *high* pressure currents into *low* pressure ones, so as to suit the various requirements of the public, either for alternate or as continuous currents, without any apparent danger to those supplied with electrical energy. In other words, so far as he has shown us, he has solved a very great problem in the distribution of electrical energy. But we would like to have from him, or from some independent person, reliable information as to the total or nett efficiency of his system, as well as of the several efficiencies of the various transformations. No doubt Mr Kennedy had only just formulated his schemes, and propounded the possibilities of a new method of distribution of electrical supply, so that it is too much to ask of him to give us, at present, a detailed account of efficiencies. But whenever he had had a chance of putting his system into practice, then the Institution

Digitized by Google

would no doubt hail with delight, and fully discuss, any information on this interesting subject which he thought fit to lay before them.

Mr Wm. M'Whirter said he also thought that this was one of the best electrical papers brought before this Institution, and one of the best papers that he had ever heard on the subject. At the same time he must differ with Mr Kennedy in regard to a great deal of it. He would be very glad if he could accept the whole as it had been told, and the whole apparatus illustrated so well by Mr Kennedy, but at the same time it seems a long way from being in a practical form. Mr Kennedy makes very light of the rectification of his currents. No doubt that is all very well, but if they consider that his currents are in quadrature, each current alternating at the rate of 60 or 80 per second, and that these brushes have to be on the exact point to take up and rectify each of these currents at the rate of 120 per second, the brushes must be exactly on the point of commutation when the current has reached zero, otherwise the life of brushes and commutators would be very short. It seemed to him that it is almost impossible to maintain that condition of affairs for any length of time. Mr Kennedy showed a diagram to give an idea of the relative amount of energy which could be carried by a wire on the low pressure continuous system and on the high pressure alternating current system, and he showed to his own satisfaction that where the wire was joined to a dynamo at one end and 200 lamps at the other end half a mile off, there was a fall in the pressure of something like 15 volts, but when using the alternating current system it passes through nearly 3000 lamps with only a loss of 3 per cent. Mr Kennedy was surprised that anybody should support the continuous system of distribution, but he forgot to tell the cost of all that. It appeared from his figures that 3 per cent. as against 15, lighting more than 10 times the number of lamps, put the question of cost entirely aside, but, taking the same sections of cable, which would have to be insulated in the best manner, it would cost something like £400 per mile. Now, they all knew, unfortunately for electrical engineers, that insulation is very expensive, and it is very liable to give trouble

Digitized by Google

afterwards, especially rubber insulation, which would have to be used in this case. If the same section conductors be taken, it would be found that copper costs about £70, so that there is a very marked difference. Of course, it would have to be insulated in some way, but at very much less cost. He found that, taking the cables now being laid in London, where the putting down of a square inch of low pressure continuous current cable costs something like 40s per square inch section per yard, high pressure cables with the same section run from £4 10s to £5 10s per yard; that is, including wires, laying, jointing, and everything else. Then again, Mr Kennedy makes a strong point of commutators, and that is a point always taken up by those in favour of alternating currents, but Mr Kennedy did not get rid of commutators in his system. If they bore in mind that Mr Kennedy transforms his currents four times before he delivers to the consumers, and recollect that each transformation means a loss more or less, he (Mr M'Whirter) would like to know what the efficiency is at the end of all these operations. They knew that the efficiency of the alternating current is very low, certainly not exceeding 50 per cent., and another thing they also knew is that it has not succeeded in doing anything great in the way of paying dividends. At Deptford they started with 20,000 volts, and then came down to 15,000, and then to 5000, and he believed they were now down to 2500. He thought he was justified in saying, as he had done last year, that the arrangement there was a mistake. Mr Kennedy proposes to do the very same thing at Glasgow. He takes a station down at Yorkhill and distributes all his work there. Why cannot he give them a station at each of these centres? They did not want his system of quadrature, or any other distribution or rectification of alternate currents. It is quite a simple matter to distribute it on the low pressure system. The conductors are at least as cheap and the efficiency is certainly considerably higher than on the other system. He was very glad to see the Corporation of Glasgow had done such a wise thing in having started a continuous current system, which will no doubt give thoroughly good results.

Digitized by Google

Mr SAYERS said Mr Kennedy, in speaking of the continuous current transformer, invariably spoke of the necessity of using two machines and coupling the shafts together. That is not the plan which is now adopted. The plan which is adopted is to put a double winding on the armature, and so get a transformation with one machine only. There is very considerable difference between the two arrangements. If two machines are coupled in line, the power—a very large power in some cases—has to be transmitted through the shaft, and a very good mechanical arrangement has to be adopted, but if the armature is wound with two windings the windings drive one another, as it were, and the shaft has nothing to do but to go lightly round and carry the weight. This fact does away to a great extent with Mr Kennedy's objections to the continuous current transformer. He admired Mr Kennedy's great ingenuity as shown in this paper. The motors and other apparatus are exceedingly ingenious, but it seemed to him that it is quite evident that the whole is not worked out to a practical conclusion. They wanted to know what the efficiency of the system would be, and as Mr M'Whirter said, how far it was practicable to rectify currents, as Mr Kennedy suggests, without getting destructive sparking. Mr Kennedy shows another scheme for Glasgow, and he suggests how he would work it. He (Mr Sayers) could see no reason why the station, which is being put down just now, and other stations, if they should be put down in the future, should not ultimately become continuous current transformer stations. Obviously, to begin with, the demand on the stations put down will be comparatively small, say one establishment in 10, or something like that, at the commencement; but when the stations get more full, and when other stations have grown up in various districts in Glasgow, it will be practicable to put down a large station on the banks of the Clyde, where coal and water could be brought at a minimum cost, and to put down a high tension continuous current generator, which would drive continuous current transformers located in the positions where the generating stations had been. The distributing system would be all there, and would not require any alteration whatever. He did not think it possible

Digitized by Google

for the stations to go on in the centre of a city, where tons of coal would have to be carried through the streets daily to keep them going, and a very large mass of smoke discharged into the atmosphere. It seemed to him that the main generating station or stations will have to get away out of the centre of the city.

Mr F. J. ROWAN said that as the transformation of continuous currents had been mentioned, he wished to confirm what has been said in the discussion, and to enter a protest against the remarks of Mr Kennedy, on page 225, that continuous currents cannot be transformed without moving machinery of an objectionable nature. He saw, quite recently, a continuous current transformer, using a current of 1000 volts, transforming that, and delivering a current at 100 volts, which is a much simpler machine to appearance than the one shown in figure 6, Mr Kennedy's transformer motor. One of these machines is running now at the Electrical Exhibition in London. It is made by the Electrical Construction Corporation at Wolverhampton. It is a very simple machine, with a commutator at each end of the shaft. He quite agreed with what Mr Kennedy says as to the perfect cure for danger from sparking in mining work—the perfect cure being the introduction of a motor without a commutator. But at the same time he did not think his description is quite fair of the other plans that have been proposed for making the existing type of motor safe. He speaks of one proposal to choke the motor in a box of poisonous gases. As one of the proposers of the plan so described, he submitted that that is not a fair description of the plan of Mr M'Whirter and himself. What they proposed to do was to generate a small percentage of carbonic acid in the inside of the box, sufficient to render a mixture of gases non-explosive, and that is rather different from choking it in a box of poisonous gases. Another motor without commutator, which has been called a multiphase motor, he had heard of lately. The idea was proposed by Tesla, and some of his motors are being made, and also a similar kind are being made in Germany, so that as far as regards the motor without a commutator, he thought that Professor Jamieson's hope that something

Digitized by Google

would be heard of that class of machinery, would be realised soon, as a good many are working on the same lines.

Mr M'WHIRTER said he would like to add one question. Mr Kennedy could give them some idea as to the torque which his machine is capable of exerting; and with regard to the alternating current machine they heard nothing at all about that.

Mr T. B. MURRAY said there was one point that he should like to say a word upon. One of the gentlemen misunderstood Mr Kennedy's transformer motor (Fig. 6). It is not for transforming currents for external use at all. He had merely given it that name as one half of it acted as transformer and the other half as a gramme armature energised by the pole armature.

Mr RANKIN KENNEDY said, in reply to Professor Jamieson, he wished to explain that the paper merely aimed at explaining the leading features of this new system, a subject quite large enough for one paper when experiments and lantern illustrations were employed. This scheme had just been developed, and so far he was very well satisfied as to the efficiencies of the conversions of the electrical energy in the system, but before bringing figures and statements forward, he wished to verify and to have some reliable verification by others of the figures upon which the efficiencies are calculated. A paper on these points is promised. Professor Jamieson has evidently grasped the whole subject, and at once comprehended its whole bearing on the subject of electrical transmission and distribution, and he was much indebted to him for the very concise and clearly put explanation of the system given in his remarks. Some things in the paper had been omitted which he had brought out when reading it, notably the striking experiment with the elements of a transformer, in which the influence of the displacement of the iron was noted in a manner not before described or shown. He was glad Professor Jamieson had mentioned this, as he would make a point of laying the results of, and showing the experiments on, this interesting subject clearly before you in the promised paper on efficiencies of the system. Referring to Mr M'Whirter's remarks, these do not touch much upon the scheme

Digitized by Google

proposed in the paper, but refer principally to his own opinions on the Deptford Alternating Station, and on the wisdom of the Glasgow Corporation in adopting low pressure distribution. Mr M'Whirter seems to be under the impression that he proposed to distribute at high pressure, whereas in the paper it is repeatedly stated that from the sub-stations the distribution is to be at low pressure, and that the high pressure was employed only to carry the electrical energy along main feeders from the generating station to these sub-stations. The scheme proposed is very different from that carried out at Deptford. The Deptford plant is a simple alternating current plant; the system proposed in the paper is a quadrature alternating system—a very different thing—nevertheless Deptford is not a failure such as Mr M'Whirter would lead us to suppose. As to the wisdom of the Glasgow Corporation and their success, in adopting low pressure, that remains yet to be seen. As to the alternating current systems now in use not paying dividends, he was not informed fully, but he knew that where they have obtained a footing they are paying dividends, but that question is of no interest in the present discussion, his paper not treating of financial questions regarding distribution as hitherto practised. The low pressure distribution schemes put into practice have, so far as he could learn, been more unsuccessful in paying dividends than any other class of investments. It is with a view to enable electrical distribution to become a good dividend paying concern that this scheme has been formulated and brought forward, and he had no fear of its capabilities in that respect. That very reason—non-payment of dividends — is the answer to Mr M'Whirter's question as to "Why can't you put a station at each centre?" Simply because it would not pay. Mr Sayers and Professor Jamieson touched on this point, and agreed with him. It cannot require a long explanation to convince any one that to dot the city over with generating stations would be a huge blunder. Engines, boilers, dynamos, and other machinery require attendance, coal and ashes have to be handled in large quantities, and, further, in the event of one central station in such a scheme being overloaded, it

Digitized by Google

can receive no help from the others, even although some of them may at the same time be idle. It might be said they could be connected, but if so it would be at such an expenditure in copper cables that it would be prohibitive, and, still further, the cost of the sites for the numerous centres would be something stupendous. Any one who has bargained for ground in the city upon which he proposes to put down a large steam factory can appreciate the question of cost of sites; as an actual instance, the Manchester Corporation, in putting down a low pressure system, had to pay £71,000 for a site in the city. If they had adopted high pressure transmission, with low pressure distribution, such as proposed in the paper, they could have got a much better site outside of the city for £10,000, a difference in favour of his scheme amounting to £61,000 in one item of first cost. Outside of Glasgow a site could be got on the river, where coal is cheaply delivered at the door without cartage. The cartage of hundreds of tons of coals to, and of hundreds of tons of ashes from a station in a city, is another item of cost saved by his scheme. Water could also be got cheap for condensing and for boiler feeds outside of the city. He rather thought the low pressure advocates consider these things as trifles beneath their notice. Then, again, the presence of large steam factories in cities and towns are a nuisance to surrounding neighbours, and this is proved rather forcibly by the numerous legal actions which have been raised by residents in London who are near some of the low pressure stations, complaining of noise, smoke, and vibration. Mr M'Whirter argues that low pressure is good enough, nothing more is wanted. He was sure Mr M'Whirter speaks only for himself on this point. It is the old question again which was once discussed among engineers, high pressure *versus* low pressure steam engines. Any one could get up and say, "Low pressure drives an engine nice and safe and easy, and the engine is very simple, and needs little or no skill to build it. Low pressure steam can be got from a cheap boiler quite safe, and cheap pipes can be used. We don't want any high pressure steam, requiring great expensive boilers and pipes, and complicated compound or triple expansion engines; we can get plenty of power

Digitized by Google

from low pressure steam." In electricity that is the identical position taken by low pressure advocates, and Mr M'Whirter puts in the parallel arguments. He would leave it to engineers to judge as to whether such arguments have any weight; has high or low pressure steam been adopted? Now, as to the question of cost of conductors. In the paper he took a conductor $\frac{1}{10}$-inch section, and showed that at high pressure this conductor would feed 3000 lamps, half mile distant, with a loss of 3 per cent. of energy. The very same wire at low pressure, carrying the same current, lights up only 200 lamps, with the great loss of 30 per cent. of the energy. Now, altogether apart from the difference in favour of high pressure on the loss in transmission, let them examine the difference in first cost. The value of the wire is not what is paid for it, but for the work it can do. At low pressure the insulation of the wire would be cheap. This wire for low pressure could be bought for about £200 per mile; for high pressure the wire would cost about £450 per mile, the difference being due to insulation alone. Now the question to be answered is what is the cost per lamp served?

$$\text{Low pressure per lamp costs } \frac{£200}{200 \text{ lamps}} = £1 \quad 0$$

$$\text{High pressure per lamp costs } \frac{£450}{3000 \text{ lamps}} = £0 \quad 3 \quad 0$$

a difference in favour of high pressure of no less than seventeen shillings per light. He would in practice use even higher pressure than 1500 volts; 3000 volts is just about the pressure at which they got all the advantages of high pressure. At 3000 volts the cost of wire per lamp in the above example would come out about 1s 8d per lamp. The wires selected are similar in every respect except insulation, and therefore they would cost the same for laying down except in the matter of joints, but a penny per light would cover that amply; at any rate the low pressure wires are laid at 40s a yard per square inch section, and high pressure wires are laid every day at 100s per yard per square inch section, but the

Digitized by Google

40s wire would feed about 2000 lights only, while the 100s wire would feed, at 3000 volts, something like 40,000 lights. Such an enormous difference requires no comment. As to Mr Sayers' suggestion that motor generators working on a high pressure continuous current system might be practicable, he would point out that high pressure generators would be required in such a scheme, and that high pressure continuous current dynamos are failures wherever tried up till now. Motor generators were familiar to him ten years ago, of both types. That type in which both circuits are on same armature has the serious drawback that it is never certain whether there is a leak between the high and the low coils, and the slightest leak would be fatal. It is not like a stationary transformer at all in point of safety, and at the high pressures necessary for transmission it cannot be worked successfully; the high pressure breaks it down. Mr Rowan's satisfaction with the one he saw was working at 1000 volts only, and was only on exhibition. Although motor generators were invented fifteen years ago, they have not in all that time made much progress. They are not practicable in the two forms mentioned by Mr Sayers. In reply to Mr M'Whirter's two questions—first, "What is the torque of the motors?" This question is somewhat obscure; he supposed it to mean what is the torque per ampere in these motors? He might state that the torque follows precisely the same law on these motors that it does in ordinary shunt motors fed by continuous currents. He did not go into the dynamo question at all, as it is a large subject in itself, and any form of alternators can be made to the work. Professor Jamieson contributed to this society a lucid paper on continuous dynamos some time ago, he might do the same for alternators. The dynamos he employed and recommended are inductor dynamos, in which there are no moving coils of wires, no commutators, and no brushes. Their leading features are—

1st. There is only two exciting coils, however many poles there may be.

2nd. They are ironclad, therefore no magnetic leakage.

Digitized by Google

3rd. There is no change of induction through the inductors nor through the field magnets, therefore there is no heating, and no losses due to hysteresis or Foucalt currents.

4th. The magnets and inductors are of cast-iron of simplest design. The machines are of cheapest construction, and are solid, rigid, and in every way mechanically sound. Electrically 92 per cent. efficiency can be guaranteed at full load.

There is nothing impracticable in the scheme submitted. He did not propose to use any untried apparatus. The elements of the system are all just such as are used in hundreds of cases every day: — engines, alternators, transformers, main feeders at 3000 volts, step-down transformers, either alternating or continuous at the sub-stations, and low pressure distributing mains. These were not peculiar to his system; they are only arranged and operated in a different method by his scheme with the object of securing all the advantages of high pressure transmission combined with low pressure distribution. The new apparatus introduced by him into the system is the rectifying commutators at sub-stations, and working with quadrature currents. Naturally, electrical engineers who have had experience with the commutation of currents in badly made dynamos have a horror of the very word commutator. It usually calls up visions of flashing, burning, sparking, and destruction generally. But the rectifying of alternating currents is quite a different problem from commutating dynamo currents, and luckily for him one easily solved. With a simple synchronous motor, on which the commutator is driven, it is impossible for the commutator to get out of phase with the current. The armature of the motor must keep step with the phase of the current or stop dead, there is no shifting possible. The motor must either follow the phase in all its changes or stop, hence if the brushes are once set to slide from plate to plate at the zero point they are always right, and as there is no self-induction to speak of in a commutator there can be no spark, in fact, there is none. Alternating current working has been very

Digitized by Google

much mystified and obscured to ordinary engineers' minds by the vast amount of algebraic and mathematical treatment which the subject has called forth. Simple alternating currents seem complicated enough, and quadrature currents and multiphase are apparently amazingly complicated. In reality there is very little mystery about the subject, the working of quadrature currents is simpler than the working of simple currents. Even granted for the sake of argument that his motor-commutator method was objected to and rejected, he could use a motor generator to convert the quadrature currents into continuous currents. A quadrature motor-generator has the advantage over the continuous current motor-generator in that it acts only as a converter from quadrature to continuous currents, and does not require to reduce the pressure (although that also can be done). There is no high pressure coils, commutator, or brushes about it. Regarding Mr Rowan's remarks about commutatorless motors, he might say that there are many plans now for such machines. They all require quadrature or multiphase currents, and are therefore not suitable for the existing alternating current plants, but given the currents, he could assure Mr Rowan that the problem is completely solved, but not in the way proposed by Tesla and Ferraris. On the new system of distribution these motors can be adopted to any extent and for any amount of power. He could also assure Mr Sayers the whole scheme has been worked out in a thoroughly practical manner and to a practical conclusion. Nothing remains to be done now but to bring its advantages before the public for its adoption in place of the present systems. The total efficiency of the system is the highest possible with any system. All the generating plant at one centre, the dynamos can always be working at their highest efficiency, and all the labour being concentrated there and controlled from there, the cost of attendance, management, and labour is a minimum. The generating station, being away where ground is cheap, and plenty of it, coals by barge or boat, water for nothing for condensing, ashes removed by boat, no restrictions to extensions, nor as to smoke, noise, or dirt, can be worked at much less cost than a station in a crowded street of a

Digitized by Google

city. The loss in the mains high pressure need not exceed 2 per cent. at the most, the loss in conversion and transforming is not more than 10 per cent. of the whole. The efficiency total between the dynamos and consumers' lamp is certainly over 80 per cent., a much higher figure than anything attained by any other system. Storage by accumulators can be freely adopted all over the system, and for motive power ordinary motors may be employed wherever they may be desired. It has been calculated that the electricity supplied by this system could be delivered to the consumers at 3d per unit, and pay a handsome dividend. It may be said that such a scheme is not necessary for the supply of electricity within a small, compulsory area. Certainly it is not; but, on the other hand, it is not compulsory to place the generating station within the compulsory area of supply. And looking to the future, when other portions of the city will require a supply, he thought it would be wise, to begin with, to provide for a site for the generating station such as would serve not only for the compulsory area, but also for other parts of the city. In conclusion, he would give a few facts and figures regarding actual working stations. At Newcastle, a high pressure station, supplying at 4½d per unit, has been paying 6 per cent. on debentures and 4 per cent. on ordinary shares, in the face of gas at 1s 10d per 1,000. Low pressure companies charging from 6d to 10d per unit cannot do better than that; but the difference is likely to be due to the fact that the high pressure station cost only 30s per lamp installed, while the cheapest low pressure station yet put down cost £6 per lamp installed. His proposition is, if a simple high pressure system can show such results in actual working, a more highly developed and more universally useful and flexible system, combining advantages of both high and low pressure and continuous currents, and alternating currents, all in one system, can do much better, and reduce the supply to 3d or less per unit. Immediately a supply falls below 3d per unit the electromotor can supply power cheaper than any other motor in existence. He had to thank the meeting for their interest in his paper, and felt indebted to the speakers for their criticism.

Digitized by Google

The PRESIDENT said he was sure the Institution was very much indebted to Mr Kennedy for his paper. They had heard that it was one of the best papers that had been delivered before the Institution, and he thought that it justified them in awarding the author a very hearty vote of thanks.

The vote was heartily accorded.

Digitized by Google

Digitized by Google

On Priestman's Oil Engine.

By Mr M. B. MOUNTAIN.

(SEE PLATES IX. AND X.)

Received and Read 22nd March, 1892.

OWING to the supply of mineral oil known as petroleum, paraffin, kerosene, etc., having become so plentiful during recent years, much thought and consideration has been given as to the best means of making proper use of this supply.

There are many openings in which this oil can be utilised, but probably its application for the production of *motive power* is among, if it is not, the most important.

Already a large number of persons have turned their attention in this direction, but not generally with much success. The methods at present employed of obtaining motive power from liquid fuel may be stated as follows :—

The burning of the oil in the furnaces of steam boilers in the place of coal or other fuel.

The use of the light oils or spirits, such as benzoline, naphtha, etc., in which the oil is converted into a vapour at a high pressure, and employed in the cylinder of an engine in the same manner in which steam is used.

The use of oil gas in gas engines, for which the oil is converted into actual gas previous to use by means of a special gas making plant.

The actual use of the ordinary burning oils within the engine,

Digitized by Google

the oil being evaporated at a low temperature, and the vapour introduced with air into the engine cylinder, and exploded as in a gas engine.

For many reasons this latter method has proved the most successful, but although enormous sums of money have been spent in England, America, and elsewhere during the last forty years in the endeavour to make a reliable engine using the ordinary mineral oil within itself, it was not until the Priestman oil engine was perfected that the efforts made produced really practical results. It may be of interest, therefore, to consider this engine, descriptive of which this paper has been written:—

The "Priestman" engine has only been perfected after a very large outlay in protracted experiments extending over many years, but the makers (Messrs Priestman Brothers, Limited, of Hull) are now in a position to offer a really reliable motor, making the user entirely independent of boiler or gas works, requiring no driver and having advantages which no other engine can offer. Professor William Robinson, M.E., in his work of 1890 on gas and petroleum engines, says:—"The novel and important feature of the new prime motor of 1888, the 'Priestman' oil engine, is the use of the common petroleum of commerce (kerosene and lamp oil) at once as fuel and working agent. In this engine, there is a good practical method of using ordinary mineral oils to produce power with perfect safety in the hands of the general public."

The use of the ordinary mineral oils being a special feature, it may be well to briefly refer to the nature of them.

Petroleum, paraffin, kerosene, etc., are names given to practically the same oil, it may be said that the names denote in a measure the country from which the supply is obtained.

From distillation of the crude mineral, various qualities of oils are produced, viz.:—

A.—The volatile or lighter oils given off at a low temperature, and known as *petroleum, spirit, benzolene, naphtha, etc.*, these are

Digitized by Google

used as already stated for producing motive power, but they are expensive and in many respects very dangerous. Their flashing point is below the Board of Trade safe limit, viz., 73° Fah., and on this account there are many restrictions as to the use and storage of them. With their use in engines very many and serious accidents have happened, and, from their frequent occurrence, have done more than any other one thing to retard the development of a motor worked by ordinary commercial petroleum, as well as having caused suspicions of danger to rest upon the other forms of oil motors, with which there is practically no danger whatever, as can be readily realised when the nature of the oils employed is considered, and the fact that no additional insurance is charged where oil engines using this class of oil are employed.

B.—The intermediate oils comprise the *light lubricating* and *burning or lighting oils.* It is this latter which is in greatest demand, can be stored without serious restrictions, and is used in the "Priestman" engine; it can be procured everywhere, and is sold in this country for as little as 4d per gallon. There are many brands of burning oils, all of which are suitable for use in the engine, and a table is exhibited (Table I.) giving the specific gravity and flashing point of some of those mostly in use.

Digitized by Google

Table I.

List of some of the Burning Oils mostly in use as source of Power in Priestman's Oil Engine.

No.	Name or Brand.		Sp. Gr. at 60° Fah.	Flashing Point by Abel Close Test.
				Deg.
1	American,	Water-White, - -	·780	108
2	,,	Ordinary, - -	·791	75
3	,,	Royal Daylight, -	·790	83
4	,,	Tea Rose, - -	·797	83
5	Russian,	Ordinary, - -	·835	82
6	,,	Another quality, -	·825	130
7	Scotch,	Broxburn Petroline, -	·800	100
8	,,	,, No. 1, -	·805	110
9	,,	,, Lighthouse,	·810	165
10	,,	Broxburn Trinity House,	·811	152
11	,,	Young's Crystal, -	·804	106
12	,,	,, No. 1. -	·807	105
13	,,	Pumpherston Pearline,	·805	103
14	,,	,, No. 2, -	·816	110
15	,,	Clippen's Sunlight, -	·805	119
16	,,	,, No. 2, -	·810	129
17	,,	Burntisland Maxim, -	·804	103
18	,,	,, No. 1, -	·807	107
19	,,	,, No. 2, -	·812	109

C.—The heavy oils, or *residue from the distillation*, comprise those oils which are used as liquid fuel in boilers and for making gas.

Upon reference to the Table given of the various brands of oil used in the "Priestman" engine, it will be seen that there is a considerable margin in both the specific gravities and the flashing points of them, and a most important feature in the engine is that each one of these oils can be used with very nearly the same advantage as another. Messrs Priestman's engines are in constant daily work in many places, using American "Royal Daylight," with a specific gravity of ·790 and a flashing

Digitized by Google

point of 83° Fahrenheit, whilst an engine supplied to the Elder Brethren of the Trinity House is working at Dungeness Lighthouse, with their special oil, having a specific gravity of ·811 and a flashing point of 152° Fahrenheit. From the figures given, it will be easily understood that, with the use of such oils, there can be no danger, either as to storage or in other ways; the oil itself will not ignite, as a lighted candle or match dropped into it would be extinguished, as in water. It must also be noted that even the lightest of these oils has a flashing point above the safe limit allowed by the Board of Trade in this country.

From the varying conditions referred to it will be evident that a great many points had to be considered in bringing out an engine to be worked by the common oils referred to, and which would take its place alongside the gas engine.

Professor Robinson, M.E., in his paper on "Prime Motors," for which the Society of Arts awarded their gold medal, speaking of the Priestman oil engine, says—"Just as the 'Otto' gas engine in the hands of Messrs Crossley Brothers in this country has been developed into a reliable and useful prime motor, inspiring public confidence, which had been shaken by the Lenoir failure, so to Messrs Priestman Brothers is due the credit of the further development of the gas engine into the common oil engine, which has now established itself as a still more useful and popular prime motor, since its fuel, ordinary burning oil, is to be had in every country village, and the engine itself can be looked after by unskilled hands. Its record has been so satisfactory that it even excels the parent gas engine in replacing small steam engines, and it is to be found doing good work efficiently at the colliery, mine, and lighthouse stations."

These remarks were made with reference to engines he had himself seen and tested, and with which he made some important experiments, more particularly with relation to the nature of the oils which can be used in the engines. One of the engines referred to by him was a 5 H.P. nominal horizontal, with cylinder 8½ inches diameter, and a stroke of 12 inches. The speed was 180 revolutions per minute; the brake horse-power developed was 7·06; and the

Digitized by Google

indicated H.P. 8·5. The measured oil consumed was ·85 pint of "Royal Daylight" brand of American oil per brake H.P. per hour. Taking the price of this oil at 5½d per gallon, the cost per actual or brake H.P. by this small engine is less than ½d per hour, and it may here be stated that larger engines give still greater economy.

In turning attention to the mechanism and construction of the Priestman oil engine it must be borne in mind that we have an engine which is complete in itself, that is to say, which requires no boiler to give a supply of steam, as in a steam engine, or a supply of gas, as in a gas engine, the power in the oil engine being obtained direct from the oil which is in the supply cistern, the engine having to prepare its own charge of vapour for combustion. It has been found from the many experiments made that the most satisfactory and only really reliable method of utilising the petroleum as a source of power is to employ it in the internal combustion type of engines in a similar way to that in which coal gas is used.

The engine, therefore, itself, in general construction, is very similar to a gas engine, working as it does upon the same principle, that is, by the internal combustion of a mixture of gas and air. In the oil engine, the petroleum becomes, as before stated, the substitute for the gas, it being vaporised before entering the cylinder, and the heat generated by the combustion of a mixture of oil vapour and air inside the cylinder is used directly to expand the products of combustion and drive forward the piston. In the horizontal type of engine, the cylinder and outside working parts rest and are fitted upon the foundation, or bed-plate, which, as seen from the drawings exhibited (see Fig. 1, Plate IX.), is a casting, hollow, and of box form. Inside this bed-plate and resting upon a sole-plate, which covers the entire underside of the bed-plate, is the reservoir, Y, or closed iron vessel in which is contained the oil for working the engine. The apparatus for vaporising the oil (the spray-maker, N, and the vaporiser, 11) is also fitted within this bed-plate, and in connection with the reservoir, upon the side of the engine, is an air pump (10), which supplies air to the oil reservoir, this being necessary for forcing the oil through the spray-maker into the vaporiser. A

Digitized by Google

second small pump is sometimes fitted to the side of the engine bed for the purpose of circulating water round the cylinder, this being cast with a jacket around it, and requiring to be cooled as in a gas engine.

The action of the engine may be described briefly as follows:— The vapour is formed by the oil being forced from the reservoir through a pipe leading to the spray-maker. Here a fine jet of oil is met at a nozzle by a supply of air, and is completely broken up into a fine spray, which enters the chamber called the vaporiser; this being warm, the spray is quickly turned into vapour, and is ready for being drawn into the cylinder, together with the necessary amount of air to make a combustible charge. An explosion takes place in the cylinder every second revolution, the action of the piston being upon its forward stroke to draw into the cylinder a charge of vapour; upon its return, this charge is compressed, and upon the crank turning its centre, an electric spark in the cylinder ignites the charge, giving the requisite impulse to the piston. The return stroke then exhausts the spent vapour, and the next stroke recommences the cycle. The spent vapour thus liberated being at this point at a high temperature, is allowed to pass around the vaporiser, so that the heat, which would otherwise be rejected and lost, is utilised in aiding the conversion of the incoming oil-spray into vapour. After doing service in this way, it escapes through the exhaust pipe. A point worthy of notice here is the lubrication of the cylinder, which takes place from a small portion of the oil during compression condensing on the cylinder surface and answers perfectly. The cylinder requires no other lubrication. The electric spark which fires the compressed charge is produced by allowing a current of electricity to play between the ends of two platinum wires, which pass through the two insulating porcelains in the igniting plug (plug exhibited), these being connected to an induction coil, for which a current is obtained from a simple primary battery of the Bunsen type, or, as is very often used, a storage cell or secondary battery, having an electro motive force of about two volts, and which has been known to work without being recharged

Digitized by Google

for more than 1100 hours. This latter form of cell has its advantage, but there are certain risks in the carriage and storing of them which lead the makers to recommend the adoption of the simple bi-chromate cell; some of these are at work, lasting from 50 to 100 hours, at a cost of about from ½d to 1d per day. The spark is timed in the cylinder by an arrangement for completing the electrical circuit, this is done by means of a contact finger passing between a pair of forks and worked from the side rod attached to the eccentric at the side of the engine, which also actuates the exhaust valve.

It is obvious that in an engine of this class several methods of ignition similar to those in use in gas engines could be adopted, but Messrs Priestman have adopted the electrical ignition after experiment, and from the advantages it possesses. M. Edward Delamore-Deboutteville, of Rouen, in a paper read by him before the Institution of Mechanical Engineers at Paris, and to which paper special attention is called in the *Engineering* of August 2nd, 1889, states:—"During a course of experiments on all the systems of ignition known, the paramount importance of a thoroughly good ignition has been conclusively proved. For safe working it is indispensable to have a perfectly certain ignition; and as a powerful ignition is a condition of immense importance, this condition is only fulfilled by the electric spark. All the methods of ignition by flame have proved inferior to it in this respect, including the superheating of a platinum wire by a flame, and the expedient of raising a thin tube to a red heat."

The engine is now being made in a variety of forms, but the same principle or method of working as described is carried out in them all, the difference being in the design or form of the engine to meet the special requirements needed. The drawings and the photographs exhibited show some of the different types of the engine, and particulars relating to them are dealt with later on.

The oil supply in these engines is a matter which is often referred to; it may, therefore, be stated that in a general way the reservoir in the engine bed-plate contains sufficient oil for a day's work, but in the

Digitized by Google

case of a prolonged run being necessary, the supply of oil may be replenished in the reservoir without stopping the engine, either by gravitation from a larger oil supply tank, or by forcing it into the reservoir by means of a hand-pump; both of these methods are successfully in use. A striking instance of the use of this arrangement was recently demonstrated at Dungeness Lighthouse a few months ago, when during one of the heavy fogs of unusual duration, the engine ran continuously for 130 hours without any inconvenience being experienced.

Of the various parts combining to make the engine what it is, especial attention may be drawn to the spray-maker and vaporiser, the construction of these being essential to the satisfactory working of an engine of this class, and the particular form adopted has been designed specially to avoid clogging of the working parts. In them we have a unique and practical combination of the two methods of treating the oil.

By the aid of the spray-maker the oil is made into a fine spray, without which it would be impossible to convert properly the oil into a vapour which can be mixed with the atmospheric air, so as to make a combustible charge which, when ignited, will not leave products of combustion in the cylinder and working parts. In the form of a spray, however, the oil passes into the interior of the heated vessel (the vaporiser, or mixing chamber), and is here thoroughly vaporised as well as mixed with the requisite quantity of air, which together constitute the combustible charge.

Models and drawings of the spray-maker and vaporiser are shown, and the following experiment will serve to more clearly explain their action.

1st,—Turn off the air supply and a flame does not light the unbroken oil jet; next, allow the air under pressure to break up and thoroughly spray the oil; the vapour formed is so intimately mixed with air that it rises in a cloud and can easily be ignited, burning with a bright flame. On the other hand, incomplete vaporisation takes place when heavy particles of hydro-carbon are seen falling below the vapour-cloud, due to want of air pressure and

Digitized by Google

consequent incomplete breaking up of the oil jet. Hence the proper proportions of oil and air must be maintained whatever be the strength of charge required, and every spray-maker must be carefully tested, adjusted, and the supply passage graduated for different conditions of running to control the action of the engine in the hands of the user.

The drawings of this spray-maker (Figs. 2, 3, and 4, Plate IX.) also show the governing arrangement adopted. The amount of hydro-carbon is diminished or increased, together with the amount of air, so as to form either a high explosive charge, or a low one, according to the work to be done by the engine. In Fig. 1, Plate IX., A is the cover to the vaporiser or mixing chamber, having a circular air passage, BB, perforated with a large number of holes at DD. E is the central hole through which the sprayed oil is forced into the chamber, while F is a cylindrical passage forming a channel for the atmospheric air to pass through before being intermixed with the sprayed oil in the vapour chamber. The wing-valve, G, is accurately fitted in the passage, F, and is put in motion by means of the spindle, H, which is connected by the lever, I, to the governor balls above. The action is thus:—A small portion of the air which is slightly compressed (4 to 12 lbs. above atmospheric pressure) in the oil cistern of the engine enters the passage, J, to the inverted nozzle, and meets the oil which has been forced by the same pressure of air through another passage, K. The oil jet is thus vaporised by the air forced upon it, and comes out in the shape of a hollow cone or cloud, to be still further mixed with a larger body of air admitted by the wing-valve, G, in the passage, F. The air in J, to be used for spraying, and the oil through the centre tube are, by the pressure in the reservoir, kept at one regular pressure, whether the engine is running light or with full load, but the amount of air through the wing-passage, FG, is rightly proportioned to mix with the oil which is allowed through the V-shaped slot, M, cut in the conical plug, H, regulated by the governor. The auxiliary body of air, after being drawn into the mixing chamber during the out-stroke of the piston in the working cylinder, is prevented from

Digitized by Google

escaping by a small retaining valve, L. Thus there is a regular explosion and impulse every cycle, which gives admirable regularity in running under varying loads. The drawings of indicator cards (see Fig. 5, Plate IX.) serve to illustrate this mode of governing, showing a gradual change in the diagrams taken with full load to running light.

A most important demand to satisfy in the construction of oil engines is to get economy of oil, coupled with the best and most efficient mechanical results, without clogging or other failure of the working parts, so that in the hands of the user the engine may run satisfactorily without constant attention, or frequent cleaning and repairs. In the engine before us these requirements are fulfilled. Clogging is prevented by thoroughly mixing the oil vapour with a large proportion of clean atmospheric air, so as always to form an explosive mixture, which gives complete combustion and a clean exhaust, and the working cost, referred to later, will be found very low.

A short description may be given of some of the types of the "Priestman" oil engine, and the purposes to which they have already been applied.

The *horizontal fixed or stationary engine*, of which a description has already been given, may be referred to again. A table (Table II.) has been prepared of this type of engine, giving the standard dimensions (see also Fig. 6, Plate IX.) This may be found useful for reference.

Digitized by Google

Table II.

Dimensions of Horizontal Engines.

Nominal Horse Power.	Diameter of Cylinder.	Stroke.	A	B	C	D	E	F	G	H	J	K	L	M	N	O
	in.	in.	ft. in.	ft. in.	ft. in.	ft. in.	ft. in.	ft. in.	ft. in.	ft. in.	ft. in.	ft. in.	ft. in.	in.	ft. in.	ft. in.
1	$4\frac{3}{8}$	8	6 $10\frac{7}{8}$	3 $4\frac{7}{8}$	2 $2\frac{3}{8}$	2 3	6 0	5 8	3 2	1 $8\frac{3}{4}$	4 $4\frac{1}{8}$	2 $1\frac{1}{2}$	0 $8\frac{1}{2}$	$3\frac{1}{2}$	0 11	1 $9\frac{1}{2}$
2	$5\frac{3}{8}$	10	7 $8\frac{1}{2}$	3 $10\frac{1}{2}$	2 $5\frac{1}{2}$	2 6	6 6	6 10	3 $6\frac{1}{2}$	1 $11\frac{1}{4}$	5 $2\frac{1}{4}$	2 $5\frac{1}{4}$	0 $9\frac{1}{2}$	4	1 2	2 $1\frac{1}{4}$
3	$6\frac{1}{2}$	12	8 $7\frac{1}{2}$	4 $3\frac{3}{8}$	2 $7\frac{1}{8}$	3 0	7 0	7 9	3 11	2 $1\frac{3}{4}$	5 $9\frac{1}{4}$	2 7	0 $9\frac{5}{8}$	5	1 4	2 $3\frac{7}{8}$
5	$8\frac{1}{2}$	12	9 $7\frac{7}{8}$	4 $11\frac{3}{8}$	3 $2\frac{3}{4}$	3 6	7 6	8 7	4 7	2 $6\frac{3}{8}$	6 $8\frac{1}{4}$	3 $0\frac{1}{2}$	0 $11\frac{1}{2}$	6	1 6	2 $7\frac{1}{4}$
7	$9\frac{3}{4}$	13	10 $5\frac{5}{8}$	5 $5\frac{3}{4}$	3 $9\frac{1}{4}$	4 0	8 0	9 6	5 0	2 10	7 5	3 $5\frac{3}{4}$	1 1	7	1 8	2 $11\frac{3}{4}$
9	$10\frac{3}{4}$	14	11 2	5 $8\frac{5}{8}$	4 $1\frac{1}{2}$	4 6	8 6	10 1	5 3	3 0	7 $10\frac{1}{2}$	3 8	1 2	$7\frac{1}{2}$	2 0	3 $1\frac{1}{4}$
11	$11\frac{3}{4}$	15	11 $7\frac{3}{4}$	6 $0\frac{1}{2}$	4 $4\frac{1}{2}$	4 9	9 0	11 0	5 6	3 $4\frac{1}{4}$	8 7	3 $10\frac{1}{2}$	1 4	8	2 $2\frac{1}{2}$	3 3

Digitized by Google

It will be seen that the engine is remarkably self-contained and compact, and yet, whilst being compact, such of the working parts as are most likely to need examination from time to time are easily accessible, and may be taken apart without difficulty. The single cylinder form of this engine is made in sizes varying from 1 to 14 H.P., and for larger sizes the engine is made with double cylinders, up to 30 H. P. (see Fig. 7, Plate IX.). The horizontal type of engine has proved a most useful motor, and is now in use for a great variety of purposes; these are too numerous to describe fully, but separate mention is made later on of a few of the special applications.

The portable type is of very similar form to the horizontal. The engine is mounted upon wheels and axles suitable for travelling, and has shafts fitted for a horse. This type has been found most useful for farm and other estate work where the motor is required to be moved from place to place. The engine has also been made portable by mounting the ordinary horizontal type upon low wheels and axles secured to the sole-plate.

The vertical form of engine, used more especially for marine purposes (see Fig. 8, Plate X.), is designed for running at high speeds, and is being, at the present time, used successfully for propelling barges, launches, etc. These engines are made with double cylinders, and at present in three sizes, viz.:—2, 5, and 10 H.P. The full sized drawings shown are of the 5 H.P. size in these engines. Each cylinder, water jacketed in the usual manner, is 7 inches diameter by 7 inches stroke, and arranged to give an explosion or working stroke every revolution of the fly-wheel or heavy disc. The valve gear is simple and ingenious. The eccentric rod, which is timed to open the exhaust valve on the return of the inner stroke of the piston, is double-acting, making it both a thrust and a pull-rod, instead of thrust only, as in the single cylinder engines. The inlet valves are self-acting, the charge being drawn in by the suction of the piston's out stroke. To keep the centre of gravity as low as possible, the oil cistern is placed in the foundation on the port side. The air pump which forces oil out of the tank is worked by an

Digitized by Google

eccentric from the counter shaft, while the water circulating pump is connected to the same eccentric. The cold water suction in the circulating pump is taken from the ship's side. The discharged water enters at the bottom of the cylinder jackets, and is carried from the top of the cylinders overboard through an overflow pipe. The mixer or vapour chamber is supported from the cylinders above the oil cisterns. The inlet valve, K, of the spray-maker is fitted to the vapour chamber similar to the horizontal type. The governor is worked by mitre pinions with a belt from the crank-shaft, which regulates the inflow of oil and air. Ignition is by the electric spark, and the contacts can be adjusted to make explosion early or late. The exhaust pipe is carried out at the stern below the water line.

The engines have not yet been made to reverse, but to overcome this an ingenious arrangement of friction clutch has been adopted, and by its means the propeller may be driven in either direction. The reversing gear does not act on the engine, but is coupled to the main driving shaft, and by a single hand-wheel allows the boat to go ahead, astern, or lie at rest, while in the latter instance the engines would, in most cases, be kept at work running light at their regular speed, controlled by the governor.

The actual horse power at 250 revolutions per minute is 5·7 and 9·1 indicated H.P. These engines are working in a small launch (see Plate IX.), 28 feet from stem to stern, 6 feet 2 inches beam, and are giving good results; speed about seven miles, and the engines work with steadiness and regularity, while the boat is completely under control, and can be quickly propelled in any direction at will.

Even when going ahead at full speed the boat can be quickly brought to rest, and then put full speed astern by simply turning a small hand-wheel.

The oil supply for running a week or two can be conveniently stored both in stem and stern, and pumped into the engine cistern as required. The ordinary burning lamp oil used can be obtained almost anywhere, and is perfectly safe in this engine. Indeed, it may be expected the extremely dangerous spirit launch will soon be

Digitized by Google

replaced by this safe common oil engine launch, both in this and other countries.

The arrangement is admirably suited for work on board ship, and these engines as well as being in use on barges in canals and launches, have been adopted for deep sea trawling.

It may just be mentioned that the Manchester Ship Canal, and the Grand Canal Company of Ireland have adopted these engines. In the former case they have been at work for a considerable time, and have given very satisfactory results.

ELECTRIC LIGHTING.

The use of this engine as a source of motive power, suitable for driving the dynamos in electric lighting installations, is one of the most important of its special applications. Its usefulness in this respect is even more fully appreciated when it is employed in country districts, and isolated places where there is no gas or where gas is expensive, and where coal is difficult to obtain. It is a *sine qua non* for electric lighting that the engine should run with the greatest possible regularity in speed to ensure steadiness of light, and to this the makers have given very careful attention, so much so that very little is left to be desired. Professor Unwin, F.R.S., in speaking of the engine, said:—"Some time ago I had an opportunity of trying the Priestman Petroleum Engine, and was immensely surprised at the results obtained. It worked more quietly, steadily, and easily than the gas engine. There was not the slightest hitch or difficulty about it during the whole time I had it under operation."

An order has lately been completed for a 25 H.P. engine for the Victorian Government, which is being used for driving electric lighting plant. This order was given after most careful inquiries had been made, and the tests held in the presence of the Government Inspector were in every way satisfactory, particular notice being taken at the time of any variation in speed, and this, it was found did not at any time exceed more than 3 per cent. between running full load and running light.

Digitized by Google

An order for an 18 H.P. engine has also been recently completed for Messrs Palmer's Shipbuilding Company, the engine in this case being used upon a Government cruiser in process of building, for the purpose of driving a temporary electric lighting installation.

A great number of private houses now obtain their light through the Priestman oil engine as the motive power, many well-known gentlemen having adopted them, and very much satisfaction is expressed at the manner in which they do their work.

The further advantages which the engine possesses in not requiring a skilled attendant are also particularly noticed here, as there are many cases where the attendant is most unskilled—gardeners, coachmen, as well as the proverbial ploughboy, managing the engine with excellent results.

FOG SIGNALLING AT LIGHTHOUSES.

A very important use to which the oil engines have been put is the driving of air compressing machinery for blowing fog horns at lighthouse stations. Fig. 9, Plate X., shows an engine coupled direct to air compressors. They were first adopted by the Northern Lighthouse Board on the recommendation of Mr D. A. Stevenson, C.E., their engineer for their Corsewall Station. After three 5 H.P. engines had been successfully put to work for this lighthouse, a further order was given for three 5 H.P. engines for their Point of Ayr Station. Since then six more engines for two more stations at Fair Isle have been ordered. Sir James Douglass, Engineer to the Trinity House, has adopted the engine for the same purpose at Dungeness. The Commissioners for Irish lighthouses have adopted them, and the Norwegian Government have erected, on the recommendation of their engineer Captain D. Rye, an 11 H.P. engine at Oxo, also for fog signalling, and after testing this at work have ordered two of 7 H.P. for similar work.

The fact of these engines working with the same oil as is used for the lamps in lighthouses is a very great advantage, but one of the special features in the Priestman engine is here brought out, viz.:—Its capability of working with the heavy oils which the Board of

Digitized by Google

Trade insist upon, even when the flashing-point of these oils is as high as 152° Fah.

The results obtained from all these engines have been quite satisfactory, especially considering the long continuous runs to which they are sometimes subjected.

PUMPING, HAULING, ETC., IN COLLIERIES.

Amongst the openings for oil engines, their use in collieries, mines, etc., for undergrouud work, is specially noticeable. In dip workings of mines, the pumping of water, hauling, etc., has always been a source of trouble and expense, particularly when a considerable distance from the bottom of the shafts, so many difficulties attending the use of steam, compressed air, etc., apart from the cost of conducting such power, steam, etc., in pipes for long distances underground; and among the objections to be met with the following may be pointed out as most general.

With regard to steam :—

1st, Loss of power by condensation.
2nd, Increase of temperature of intake or return.
3rd, Difficulties in dealing with the exhaust.
4th, Bad effects of the exhaust, etc., *i.e.*, moisture and increased temperature on the roof stone.
5th, Its use in confined places being attended with danger in case of leakages.

With the use of compressed air some of the foregoing objections are dispensed with, but only comparatively small useful effect obtained, more especially when used at very high pressures. There are, of course, other means of dealing with the work to be done, but the question as to which is really the best method, *i.e.*, the least costly when considering the greatest efficiency, is one which has occupied the attention of a good many, and to this end the Priestman oil engine has undoubtedly many merits. In some cases where these engines have been adopted no other systems could compare,

Digitized by Google

either in first cost or in actual working expense, as is shown by some figures given later on in this paper. Already a considerable number of people have taken advantage of the inducements offered by these oil engines, so that many can be seen in successful operation in various parts of the kingdom, engaged in pumping, hauling, ventilating, rock-drilling, etc. Various arrangements for these purposes have been made, drawings and photographs of a few of them being exhibited.

For pumping purposes Figs. 10 and 11 (Plate X.) show very convenient arrangements. In the former the engine is connected to a set of vertical double-ram pumps, the engine crank-shaft being coupled direct to the pinion-shaft of the pumps.

It is sometimes found desirable to provide a clutch, so that the engine may be started more easily. If such is required, it can without trouble be fitted upon the pinion-shaft, or a simple way of relieving the work when starting the engine is to have a bye-pass valve in the delivery. Pumps of this pattern are also in use driven by a belt from the engine, a pulley in this case being fitted upon the crank-shaft of the engine, and another on the pinion-shaft of the pump.

The other illustration shows an arrangement of the engine and set of three-throw horizontal pumps, the pumps being driven from a pinion in the engine crank shaft working into a spur wheel on the pump crank-shaft. This arrangement shows a clutch for use when starting. Many other arrangements of engines and pumps could be made, but those described merely indicate two simple methods already in use.

As to saving in cost, an instance can be mentioned where the use of an oil engine and pumps has proved highly satisfactory. Here a set of pumps were originally worked from the tail-rope of the haulage system, and to dispense with this one of Priestman's oil engines and a double-acting pump were put down. These are placed at a distance of about 2,400 yards from the shaft, and at a point 165 vertical feet in the dip. The engine is 5 H.P., and drives the pump by belt, this being double-acting, having a barrel 6 inches

Digitized by Google

diameter, with a stroke of 18 inches. The water is forced a distance of 1320 yards to a height of 72 feet. The engine-house is walled in with two brick partitions, and the temperature of the engine-house never exceeds 65° Fahrenheit. The exhaust pipes only run to a distance of 33 yards from the engine, where the exhaust escapes into the return air-way. The cost of working this plant has been found to be as follows:—

Material—	10 gallons of oil at 6½d,	£0	5	5*	
	Battery charge and zinc,	0	0	3*	
	Stores, oil, waste, etc., ...	0	0	1	
		£0	5	9	
Labour—	One engineman at ...	0	4	11	
		£0	10	8	for 10 hours.

In the above, the engineman is allowed as being always occupied at the engine, whilst in reality after the engine is started it can be left and the man employed elsewhere. When working the pump from the tail-rope, the following was the cost per 10 hours:—

Material—	Wear and tear of ropes, etc.,	£0	5	0	
	Other stores, ...	0	0	6	
	Coals, 2 tons at 5s, ...	0	10	0	
Labour—	One engineman, ...	0	5	0	estimated.
	One rope-winder, ...	0	3	0	„
	Two ropper boys, ...	0	6	0	„
	One engine planeman, ...	0	4	6	„
		£1	14	0	per 10 hours,

which means a saving in favour of the oil engine of £1 3s 4d per

---

* The figures here are taken from a description of the plant prepared at the time, the cost of the oil and battery charge is now considerably lower, as mentioned in other parts of this paper.

Digitized by Google

shift of 10 hours. If this is multiplied by the number of shifts per annum, the saving amounts to very tall figures.

A table is given for reference, showing the approximate gallons of water raised per minute by Priestman's oil engines.

Table III.

Approximate Gallons of Water raised per minute by Priestman's Oil Engine.

Height Raised.	1 H.P.	2 H.P.	3 H.P.	5 H.P.	7 H.P.	9 H.P.	11 H.P.
feet							
10	260	520	780	1300	1820	2340	2860
20	130	260	390	650	910	1170	1430
30	88	176	262	440	616	792	968
40	66	132	198	330	462	594	736
50	52	104	157	260	364	468	572
60	44	88	132	220	308	396	484
80	33	66	99	165	231	297	363
100	25	50	73	123	172	221	271
120	22	44	62	103	144	185	224
160	16	32	46	77	108	139	169
200	13	25	37	63	89	111	137
250	7	14	20	33	49	60	74
300	5½	11	16	27	39	50	62
400	4	8	12	20	28	36	43
500	3	6	9	15	21	28	32

NOTE.—In the above, no allowance has been made for friction in pipes; the gallons stated must therefore be reduced accordingly. Friction and slip in pumps is allowed.

For hauling purposes, a drawing is exhibited (Fig. 12, Plate X.) of an arrangement for working on a single track, in which a drum is used to do the winding, the hutches running down the incline of their own weight. It will be seen that an arrangement of wheels, etc., are fitted for the purpose of reversing the direction in which the drum revolves as required, being so actuated by a simple lever working a clutch. This, of course, is a very simple arrangement

Digitized by Google

when it is not thought expedient to put in an endless rope or double track.

Fig. 13 (Plate X.) shows an arrangement for working an endless rope. Gearing in this case is connected with a pinion fitted upon the engine crank-shaft, and finally drives the rope wheel (grooved) round which the rope passes. A clutch is fitted so that the rope can be stopped when required, and the engine allowed to run empty. This arrangement, as can be seen, is a very suitable one for either single or double track. In the latter case power is available for the empty hutches if needed.

Both of these arrangements for hauling are in actual use, and every satisfaction has been expressed at the results obtained.

For rock-drilling, Mr A. L. Steavenson, of Durham, has put to work a number of drills worked by Priestman's oil engines, the apparatus being specially designed by him. Fig. 14 (Plate X.) shows this, from which it will be seen that the power is transmitted by means of a rope band running in grooved pulleys. The spindle actuates the drill through bevel wheels connected to drill spindle. There is provision made in this to allow of the drill being released and drawn out when the hole has been bored deep enough. The position of the drill can be altered so as to cover the face of the rock up to 10 feet high by 14 feet wide.

The result of working this apparatus has proved that two holes, each 5 feet 6 inches deep, by 2 inches diameter, has been drilled by it within five minutes, including the time required for changing the drills and moving from the first hole to the second. This is a very considerable saving over what has hitherto been done.

As is well known, drilling has hitherto been effected by compressed air to a limited extent, but the serious loss for this purpose (as in the cases previously referred to) by leakage, and the cost of the necessary piping and plant has made this system the reverse of attractive to many mining people. It may also be added that the plant under consideration dispenses with these difficulties, and being only about 50 cwts. in weight, is quite portable, and can be brought up to any required point.

Digitized by Google

Another apparatus for rock-drilling is shown (Fig. 15, Plate X). This was specially constructed for hard rock, and is in use with a diamond-crowned tool doing the work. It will be seen that this arrangement has both a vertical and horizontal movement, so that the hole may be drilled in any position. From information obtained from one firm who are users of this apparatus, we find they are working in very hard blaes or whinstone, and can with ease drill holes about 1½ inches diameter at the rate of 2 feet in ten minutes. In softer stone a much greater speed can, of course, be obtained, but this is a very great increase over hand work. This apparatus is suited also for the twist drill, as used in freestone, and in first cost comes cheaper than the one previously described, though, of course, it has not the same means of adjustment or so great a range.

Both arrangements are mounted upon wheels, and are, in consequence, easily moved about.

As can be readily understood from the various arrangements described, it is a very simple matter to apply the Priestman oil engines for driving ventilating fans, for which they have already been put to work, as well as for other purposes not referred to, and sufficient will now have been said with regard to the use of these oil engines in collieries, etc., to enable an opinion to be formed as to their reliability and suitability for the many calls for motive power in such places.

A gentleman, within the last few days, in a letter addressed to Professor Unwin, writes with reference to an engine in his colliery used for pumping :—

"The engine under notice is one of Messrs Priestman's 8 H.P. nominal, 10 in. cylinder and 15 in. stroke, speeded to run light at 180 strokes per minute, but when pumping runs about 165 or 170. The engine was first started on 10th June, 1889, and has been running continuously up to the present time. The average running time per day of 24 hours is from 10 to 12 hours, and the oil used is ordinary 'Royal Daylight,' with a flashing-point of about 83° of

Digitized by Google

temperature. The consumption per week of seven days, averages 100 gallons, or a little over a gallon per hour."

The engine referred to is coupled by gearing to a set of three throw pumps having barrels, 6 inches diameter × 14 inches stroke.

Professor Unwin, in his paper on petroleum engines, read before the Institution of Civil Engineers, a few weeks since, gives some interesting data with reference to some trials he made with a Priestman oil engine.

A statement of figures extracted from these trials is exhibited (Table IV.), which gives some information as to results obtained.

Table IV.

Results of Trials.

Brand of oil used, -	Day-light.	Russolene.			
No. of trial, - -	V. Full Power.	I. Full Power.	IV. Full Power.	II. Half Power.	III. No Load.
Revolutions per minute,	204·3	207·7	211·3	214·3	187·3
Mean effective pressure in cylinder, lbs. per sq. inch,	53·2	41·4	45·8	25·5	5·5
Brake horse power, -	7·72	6·77	6·88	3·62	0
Indicated horse power,	9·37	7·41	8·33	4·71	0·89
Mechanical efficiency, -	0·82	0·91	0·83	0·77	

The following comparison of working cost of the oil engine, with both gas and steam, is for fuel only. The price of coal is taken at 24s per ton, and gas at 3s per 1000 cubic feet.

Digitized by Google

Table V.

Cost of Working for Fuel only per Hour.

	Per I.H.P. hour.		Per E.H.P. hour.	
	Quantity of Fuel.	Cost, Pence.	Quantity of Fuel.	Cost, Pence.
Large condensing steam engine, - - -	1¾ lbs.	0·23	2 lbs.	0·26
Small non-condensing steam engine, -	5 „	0·64	6 „	0·77
Gas engine, - -	21 cub. ft.	0·77	24 cub. ft.	0·86
"Priestman" oil engine,	0·85 lb.	0·43	1 lb.	0·50

Table VI. is the oil consumption in the "Priestman" oil engine, in ordinary work, obtained by correspondence with users of the engines, for comparison with the results obtained in the special test trials.

Table VI.

Oil Consumption in Ordinary Work.

Purpose to which the Power is applied.	Nominal effective H.P. of engine.	Oil consumption per hour.	Cost of running engine one hour with oil at 3½d per gallon.	Cost per effective H.P. of engine per hour.
		pints.	pence.	
Electric lighting, -	18	16	7·00	0·39
Corn mill, - -	11	11	4·81	0·44
Electric lighting, -	8	8	3·50	0·44
„ „ -	8	10½	4·60	0·58
„ „ -	7	9	3·94	0·56
Agricultural machinery,	5	4	1·75	0·35
Air Compressors for Lighthouses, - -	5	6	2·62	0·52
Rock drills, - -	5	4	1·75	0·35
Pumping, - -	4	4½	1·97	0·49
Agricultural machinery,	3	4	1·75	0·58
Small machine tools,	2	3½	1·53	0·76

Digitized by Google

There were, of course, many other figures and results obtained from the trials made, but those given above will doubtless be sufficient to enable an opinion to be formed as to the satisfactory results obtained from the engine under notice.

It may be stated, in conclusion, that a very large number of the "Priestman" Oil Engines are now at work in all parts of the world, giving every satisfaction, and the makers are very busily employed executing orders for their various types and sizes, many being repetition orders.

The discussion on this paper took place on April 26th, 1892.

Mr BURT said he had seen this oil engine working at Corsewall. There was no doubt that for lighthouse work it was a very great improvement on the gas engine. The Northern Lights Commissioners had also put it down at Fair Isle, and he thought on the whole it was a very valuable contribution to engineering science.

Mr RALPH MOORE said he thought this is a very important invention for mining work. The engine makes its own gas. It is a heat engine, and theoretically should give better results than a steam engine. It might be applied in a great many ways. It takes up little space; it is all self-contained, and has not an undue amount of heat.

Mr MOUNTAIN said he was very much pleased to hear Mr Moore speaking about the engine, because, with one exception, these engines had not proved unsatisfactory in any colliery, and now there were a very great number at work for pumping, rock-drilling, and for driving fans. There had been very little trouble and very few complaints.

On the motion of the Chairman, a hearty vote of thanks was awarded Mr Mountain for his paper.

Digitized by Google

Digitized by Google

List of papers read before Societies and of publications bearing on this subject, compiled by Mr Ernest Scott, London.

Appendix to Paper read 24th November, 1891.

Institution of Civil Engineers—

"Electric Mining Machinery," by Ll. B. Atkinson and C. W. Atkinson, Vol. CIV., page 89 (1891).

Institution of Mechanical Engineers—

"On Recent Improvements in the Mechanical Engineering of Coal Mines," by E. Bainbridge, page 360 (1890).

"On the Position and Prospects of Electricity as applied to Engineering," by W. Geipel, page 76 (1888).

North of England Institute of Mining Engineers—

"Notes on the Present Position of the Question of Transmission of Power," by A. L. Stevenson, Vol. XL., page 93 (1891).

"Principles of Electric Lighting and the Construction and Arrangement of Electric Light Apparatus," by S. F. Walker, Vol. XXXIV., page 3 (1884).

"Notes on an Electric Transmission Plant at East Howle Colliery," by H. Palmer, Vol. XL. (February, 1891).

"Electricity and its Application to Mining Operations," by D. Selby Bigge, Vol. XL. (February, 1891).

South Wales Institute of Engineers—

"Electric Lighting for Collieries," by W. Thomas, Vol. XII., page 569.

"The Principles of Electric Lighting and Transmission of Power by Electricity," by S. F. Walker, Vol. XIII., pages 100, 159, 224, 283, etc.

Digitized by Google

"Recent Improvements in the Construction and Arrangement of Apparatus for Electric Lighting and Transmission of Power by Electricity, by S. F. Walker, Vol. XIV., p. 226.

"Electric Pumping in Mines," by F. Brain, Vol. XV., page 363.

"Application of Electricity to Underground Haulage," by G. F. Tallis, Vol. XVI., page 124.

"Notes on Electrical Work in Mines," by A. T. Snell, Vol. XVII., page 196 (1891).

Chesterfield and Midland Counties Institution of Engineers—

"Electric Lighting and Transmission of Power in Mines," by T. M. Winstanley-Wallis, Vol. XXII., page 242 (1889).

"Coal Getting by Machinery," by Blake Walker, Vol. XVIII. (1891).

"Distribution of Electric Energy over Extended Areas in Mines," by A. T. Snell, Vol. XVIII. (1891).

National Association of Colliery Managers—

"Application of Electricity to Mining," by V. Hughes, Vol. I., page 266 (1889).

"Electric Transmission of Power as Applied to Mining Operations," by A. T. Snell, Vol. I., page 195 (1889).

"Electricity as Applied to Mining," by J. Clarke, Vol. II., page 311 (1890).

"Electricity as Applied to Mines," by F. Brown, Vol. III., page 255 (1891).

"Notes on Electric Mining in America," by G. R. Rhodes, Vol. III., page 591 (1891).

"Application of Electricity to Mining" (paper by Dr Otten at the Frankfort Congress, 1891).

British Society of Mining Students—

"Electricity as a means of Lighting Mines," by R. B. Mawson (President's Address), Vol. X., page 82.

"Coal Cutting by Electricity," by H. W. Hughes, Vol. XI., page 127.

"Application of Electricity to Mining," by H. W. Hughes (President's Address), Vol. XII., page 20.

Digitized by Google

"How to Light a Colliery by Electricity," by S. F. Walker Vol. XIII., page 147.

"Description of Electrical Pumping Plant at South Pontop Colliery," by J. R. Ritson, Vol. XIV., page 82.

British Association for the Advancement of Science—

"Electricity as Applied to Mining," by F. Brain (Bath Meeting, 1888), page 815.

"Electric Lighting on Cannock Chase Colliery," by A. Sopwith (Birmingham Meeting, 1886), page 814.

Mining Institute of Scotland—

"Application of Electricity to Mining Operations," by F. J. Rowan, Vol. VIII., page 273.

"On Recent Developments in the Application of Electricity to Mining," by F. J. Rowan, Vol. XI., page 18.

"Practical Application of Electricity to Mining Operations," by Ll. B. Atkinson and C. W. Atkinson, Vol. XIII., page 214 (1891).

Institution of Engineers and Shipbuilders in Scotland—

"On Electric Lighting for Ships and Mines," by A. Jamieson, Vol. XXV., page 73 (1881-82).

American Institute of Electrical Engineers—

"Notes on Electricity in Mining Work," by S. F. Walker, Vol. VIII., page 431 (1891).

American Institute of Mining Engineers—

"The Electric Motor in Mining Operation," by G. W. Mansfield, Vol. XVI., page 851.

"The Present Status of Electric Transmission of Power," by R. P. Rothwell, Vol. XVII., page 555.

"Electricity and Haulage," by F. A. Pocock, Vol. XVIII., p. 412.

"The Practical Application of Electricity to Coal Mines," by J. S. Doe, Vol. XIX., page 276 (1890-91).

"The Use of Electric Power, Transmission at Aspen, Colerado," by C. E. Doolittle, Vol. XIX., page 283 (1890-91).

"Accumulator and Mining," by F. A. Pocock, Vol. XIX., page 278 (1890-91).

Digitized by Google

"Electric Power Transmission in Mining Operations," by H. C. Spaulding, Vol, XIX., page 258 (1890-91).

Franklin Institute of United States—

"Notes on Electro-Magnetic Machinery," by W. S. Aldrich, Vol. CXXXIII., page 130.

"The Transmission of Power by Electricity," by Frank J. Sprague, Vol. CXXVII., page 161.

"On the Variable Action of Two Coil Solenoids," by W. S. Aldrich, Vol. CXXXIII., page 317.

Buffalo Convention of the National Electric Light Association of the United States, February 24th, 1892—

"The Transmission of Electric Energy by Alternating Current and its Utilisation by Continuous Currents," by H. W. Leonard.

Engineers' Club of Philadelphia—

"Limitations of Electrical Transmission," by A. S. Morris, Vol. IX., page 153.

Colorado Scientific Society—

"The Present Limitations of Electric power in Mines," by Irving Hale.

Belgian Society of Mining Engineers—

"L'Application de l'Electricité dans les Travaux des Mines," by D. Selby Bigge.

Annuaire L'Association des Ingénieurs—

"Transport de la Force par l'Air Comprime et par l'Electricité," par M. Bayet, Cinquième Série Tome IV., page 47 (1891).

Series of Lectures on Electricity and Mining, given by Professor W. Robinson and others for the National Association of Colliery Managers, in conjunction with the Technical Committees of the County Councils of Derbyshire and Nottinghamshire, 1891 and 1892.

"Description of Electric Safety Lamps," part XII. of *Practical Electrical Engineering*, published by Biggs & Co.

Digitized by Google

Electric Transmission of Energy, its Transformation, Sub-division, and Distribution, by Gisbert Kapp. Publishers, Whittaker & Co.

Colliery Manager—

"Electricity and Mining" (November 21st, 1890).

Colliery Machinery—

"Electricity Applied to Colliery Working," by Sidney F. Walker. Published by *Colliery Guardian.*

Reference Book on Practical Coal Mining, 4th Edition, by W. Wardle.

Mining and Ore Dressing Machinery, by C. G. Warnford-Lock.

Electrical World (New York)—

"Electricity in Mining," Vol. XVIII., pages 402, 414, 433, etc.

"Practical Application of Electricity in Coal Mines," Vol. XVIII., page 419.

"Application of Electricity in Mines," by E. Dieudonne, *Luminière Electric*, Vol. XXXVI., page 110.

Digitized by Google

The JAMES WATT ANNIVERSARY DINNER, held jointly by the Institution and the Philosophical Society of Glasgow, took place on 8th February, 1892, in the Windsor Hotel, St. Vincent Street.

Mr ROBERT DUNDAS, M.Inst.C.E., President, occupied the chair.

In proposing the "Memory of James Watt" the PRESIDENT referred to the advantage of combining theory with practice. "Watt was a great inventing genius: his mind was always at it; but he could not bring his inventions to a practical result without having a man of thorough business capability. It was the combination of Boulton and Watt that made the steam engine a great success."

There was a good attendance, though hardly equal to what might be expected from the membership of the two societies.

Digitized by Google

Institution of Engineers and Shipbuilders

IN SCOTLAND

(INCORPORATED).

THIRTY-FIFTH SESSION, 1891-92.

MINUTES OF PROCEEDINGS.

THE FIRST GENERAL MEETING of the THIRTY-FIFTH SESSION of the Institution was held in the Hall of the Institution, 207 Bath Street, on Tuesday, the 27th October, 1891, at 8 P.M.

Mr ROBERT DUNDAS, M.Inst.C.E., President, in the Chair.

The Minute of Annual General Meeting, held on 28th April, 1891, was read and approved, and signed by the President.

The PRESIDENT delivered his Inaugural Address. On the motion of Mr RALPH MOORE, a vote of thanks was awarded the President for his Address.

The Medals and Premiums awarded at Annual General Meeting of the Institution, held on 28th April, 1891, were presented, viz.:—

The Institution Medal to Mr ANDREW S. BIGGART, for his paper on "The Erection of the Superstructure of the Forth Bridge."

Premiums of Books to:—

Mr HENRY DYER, M.A., D.Sc., for his paper on "A University Faculty of Engineering."

To Mr PETER FYFE, for his paper on "The Utilisation of the Water of Condensation from Steam Pipes and Cylinders."

To Professor ARTHUR W. THOMSON, D.Sc., for his paper on "The

Digitized by Google

Alexander-Thomson Moment Delineator, and its Application to Maximum Bending Moments due to Moving Loads;" and to

Mr ROBERT SIMPSON, B.Sc., for his paper on "Railway Construction in the West Indies."

A paper by Mr JOHN R. RUTHVEN, on "Ruthven's Jet Propeller," was read. A discussion followed, and was continued to next General Meeting.

The President announced that the Candidates balloted for had been unanimously elected, the names of these gentlemen being as follows:—

AS MEMBERS:—

Mr CHARLES CLARKSON, Mechanical Engineer, 21 Bothwell Street.

Mr ANDREW JOHNSTON, Mechanical Engineer, Bank Buildings, Hong Kong.

Mr SAMUEL MECHAN, Engineer, 5 Kelvingrove Terrace.

Mr WALTER NEILSON, Mechanical Engineer, Clydebridge Steel Works, Cambuslang.

Mr A. T. BROWN, Mechanical Engineer, 18 Glencairn Drive, Pollokshields.

Mr SINCLAIR COUPER, Mechanical Engineer, Moore Park Boiler Works, Govan.

Mr WILLIAM T. PHILP, Mechanical Engineer, Workman, Clark, & Co., Belfast.

Mr J. MACEWAN ROSS, Mechanical Engineer, Ardenlea, Lenzie.

AS AN ASSOCIATE:—

Mr JAMES GALLOWAY, Jun., Cashier, Whitefield Works, Govan.

AS GRADUATES:—

Mr ARCHIBALD BLAIR, Jun., Draughtsman, 7 Corunna Street.

Mr JAMES COCHRANE, Apprentice Engineer, 55 Sandyfaulds Street.

Mr JAMES GOURLAY, Apprentice Engineer, 11 Crown Gardens, Dowanhill.

Mr JAMES KING, Apprentice Civil Engineer, 110 Hill Street, Garnethill.

Digitized by Google

Mr HENRY MACEWAN, Mechanical Draughtsman, 5 Cathkin Terrace Mount Florida.

Mr CAMPBELL TURNBULL, Apprentice Engineer, 255 Bath Street.

Mr W. L. TURNBULL, Apprentice Engineer, 255 Bath Street.

THE SECOND GENERAL MEETING of the THIRTY-FIFTH SESSION of the Institution was held in the Hall of the Institution, 207 Bath Street, on Tuesday, the 24th November, 1891, at 8 P.M.

Mr ROBERT DUNDAS, M.Inst.C.E., President, in the Chair.

The Minute of General Meeting of 27th October, 1891, was read and approved, and signed by the President.

It was agreed to postpone the discussion of Mr RUTHVEN'S paper on "Ruthven's Jet Propeller" to next General Meeting.

The following papers were read :—

On "Brown's Rotary Expansive Engine," by Professor JAMIESON, M.Inst.C.E.

On "Electricity in its relation to Mining," by Mr ERNEST SCOTT.

The discussions of these papers were postponed to next General Meeting.

On account of the lateness of the hour it was agreed to defer the reading of Mr J. M. ADAM'S paper on "Some New Forms of Bends and Junctions in Tubular Construction" to next General Meeting.

The President announced that the Candidates balloted for had been unanimously elected, the names of these gentlemen being as follows:—

AS MEMBERS :—

Mr J. ANTHONY INGLIS, Engineer, 10 Kingsburgh Gardens, Kelvinside.

Mr MONTAGUE B. MOUNTAIN, Mechanical and Electrical Engineer, 3 Albion Crescent, Dowanhill, Glasgow.

Digitized by Google

Mr JAMES B. REID, Engineer, Chapelhill, Paisley.
Mr A. SPENCE, Shipbuilder, Grangemouth.

AS GRADUATES:—

Mr JAMES RUSSELL, Draughtsman, Belmont, Uddingston.
Mr ALEXANDER SMITH, Mechanical Draughtsman, 54 Albert Road, Crosshill, Glasgow.

The President announced the forthcoming James Watt Anniversary Dinner, and trusted that there would be a large attendance of Members.

THE THIRD GENERAL MEETING of the THIRTY-FIFTH SESSION of the Institution was held in the Hall of the Institution, 207 Bath Street, on Tuesday, the 22nd December, 1891, at 8 P.M.

Mr ROBERT DUNDAS, M.Inst.C.E., President, in the Chair.

The Minute of General Meeting of 24th November, 1891, was read and approved, and signed by the President.

As there was no further discussion of Mr RUTHVEN'S paper on "Ruthven's Jet Propeller," a vote of thanks was awarded the author for his paper.

The discussion of Professor JAMIESON'S paper on "Brown's Rotary Expansive Engine," was proceeded with and terminated, and a vote of thanks awarded the author.

The discussion of Mr ERNEST SCOTT'S paper on "Electricity in its relation to Mining," was postponed to next General Meeting, as was also the reading of Mr J. M. ADAM'S paper on "Some New Forms of Bends and Junctions in Tubular Construction."

A paper on "Pyrometers," by Mr JOHN CRUM, was read, the discussion being deferred to next General Meeting.

Digitized by Google

The President announced that the Candidates balloted for had been unanimously elected, the names of these gentlemen being as follows:—

AS MEMBERS:—

Mr THOMAS BLACKWOOD MURRAY, B.Sc., Engineer, Carntyne Electric Works.

Mr HENRY BRIER, Mechanical Engineer, 47 Dixon Avenue.

Mr JAMES HOWDEN HUME, Mechanical Engineer, 5 Maxwell Terrace, Pollokshields.

Mr RANKIN KENNEDY, Engineer, Carntyne Electrical Works.

Mr JOHN YOUNGER, Mechanical Engineer, 7 Park Terrace, Crosshill.

AS GRADUATES:—

Mr WILLIAM D. BOWMAN, Apprentice Engineer, 102 Hill Street, Garnethill.

Mr KRISTIAN S. DEKKE, Apprentice Shipbuilder, 10 Franklin Ter.

Mr ALEXANDER FERGUS, Draughtsman, 7 Ibrox Place.

Mr W. L. FERGUSON, Draughtsman, 2 Ardgowan Terrace.

Mr GEORGE HOWSON, Apprentice Engineer, 7 Park Terrace, Govan.

Mr WILLIAM ORR LEITCH, Jun., Apprentice Civil Engineer, 3 Germiston Street.

Mr HUGH OSBOURNE, Apprentice Engineer, 30 Rose St., Garnethill.

Mr MARSHALL OSBOURNE, Apprentice Engineer, 35 Burnbank Gar.

Mr JAMES RUSSELL, Draughtsman, 16 Rocklea Terrace, Hillhead.

Mr JAMES STARK, Apprentice Civil Engineer, 3 Germiston Street,

Mr CLEMENT H. STEVENS, Draughtsman, 13 Princes Street, Pollokshields.

Mr CECIL TICKLE, Apprentice Engineer, 5 Park Terrace, Govan.

Mr NORMAN TROTT, Apprentice Engineer, 60 Victoria Rd., Crosshill.

Digitized by Google

THE FOURTH GENERAL MEETING of the THIRTY-FIFTH SESSION of the Institution was held in the Hall of the Institution, 207 Bath Street, on Tuesday, the 26th January, 1892, at 8 P.M.

Mr ROBERT DUNDAS, M.Inst.C.E., President, in the Chair.

The Minute of General Meeting of 22nd December, 1891, was read and approved, and signed by the President.

The discussions of Mr ERNEST SCOTT'S paper on "Electricity in its relation to Mining," and of Mr JOHN CRUM'S paper on "Pyrometers," were proceeded with and terminated, votes of thanks being awarded the authors.

A paper on "Some New Forms of Bends and Junctions in Tubular Construction," by Mr J. MILLEN ADAM, was read, the discussion being deferred to next General Meeting.

The President announced that the Candidates balloted for had been unanimously elected, the names of these gentlemen being as follows:—

AS MEMBERS:—

Mr JAMES BROWN, Engineer, Bilbao, Spain.

Mr FRED. JOHN ROWAN, Civil Engineer, 121 West Regent Street, Glasgow.

Mr JOHN WALLACE, Mechanical Engineer, 12 Kelvingrove Street, Glasgow.

AS AN ASSOCIATE:—

Mr ALEXANDER YOUNG, Machinery Agent, 53 Waterloo Street, Glasgow.

AS GRADUATES:—

Mr PETER BAIN, Engineer Draughtsman, 54 Glasgow Road, Dumbarton.

Mr WM. M'L. HOMAN, Pupil Civil Engineer, 6 Buckingham Buildings, Glasgow.

Mr JAMES H. MUIR, Mechanical Draughtsman, 19 Westmuir Street, Parkhead, Glasgow.

Digitized by Google

Mr JOHN S. NAPIER, Apprentice Engineer, 6 Windsor Circus, Kelvinside, Glasgow.

Mr JAMES STEEL, Apprentice Draughtsman, 239 St. Vincent Street, Glasgow.

Mr FREDERICK THOMSON, Apprentice Engineer, 108 Buccleuch Street, Garnethill, Glasgow.

Mr JOHN WALLACE, Jun., Marine Engineer's Draughtsman, 12 Kelvingrove Street, Glasgow.

THE FIFTH GENERAL MEETING of the THIRTY-FIFTH SESSION of the Institution was held in the Hall of the Institution, 207 Bath Street, on Tuesday, the 23rd February, 1892, at 8 P.M.

Mr GEORGE HERRIOT, Vice-President, in the Chair.

The Minute of General Meeting of 26th January, 1892, was read and approved, and signed by the Chairman.

The discussion of Mr J. MILLEN ADAM'S paper on "Some New Forms of Bends and Junctions in Tubular Construction" was proceeded with and terminated. A vote of thanks was awarded Mr ADAM for his paper.

The following papers were read:—

On "Limes and Cements; their Nature and Properties," by Mr ALEXANDER M'ARA.

On "The Electric Motor," by Mr W. B. SAYERS.

The discussion of these papers was deferred till next General Meeting.

The Chairman announced that the Candidates balloted for had been unanimously elected, the names of these gentlemen being as follows:—

Digitized by Google

AS MEMBERS:

Mr JAMES CHALK, Mechanical Engineer, 66 Bath Street, Glasgow.

Mr JOHN FINLAY MACLAREN, B.Sc., Iron Founder, Eglinton Foundry.

Mr ROBERT MURRAY, Mechanical Engineer, 28 Waterhouse Lane, Hull.

Mr ROBERT MOTION, Managing Engineer, Messrs J. & P. Coats, Paisley.

AS GRADUATES:

Mr ROBERT H. BROWN, Apprentice Engineer, 5 Woodville Place, Govan.

Mr GEORGE H. COX, Ship Draughtsman, Messrs J. & G. Thomson, Clydebank.

Mr NORMAN O. FULTON, Apprentice Mechanical Engineer, Woodbank, Mount Vernon.

THE SIXTH GENERAL MEETING of the THIRTY-FIFTH SESSION of the Institution was held in the Hall of the Institution, 207 Bath Street, on Tuesday, the 22nd March, 1892, at 8 P.M.

Mr RALPH MOORE, Vice-President, in the Chair.

The Minute of General Meeting of 23rd February, 1892, was read and approved, and signed by the Chairman.

Messrs A. A. HADDIN and JOHN TURNBULL, Jr., were unanimously appointed auditors of the Treasurer's Annual Financial Accounts.

The discussion of the papers on "Limes and Cements: their Nature and Properties," by Mr ALEXANDER M'ARA; and on "The Electric Motor," by Mr W. B. SAYERS, was deferred till next General Meeting.

Digitized by Google

The following papers were read :—

On " A New System of Electrical Distribution and Transmission, with Experiments," by Mr RANKIN KENNEDY ; and

On " Priestman's Oil Engine," by Mr M. B. MOUNTAIN.

The paper by Dr A. C. KIRK, entitled " Notes on the Investigations concerning the Power and Speed of Steam Ships," was held as read.

The discussion of these papers was deferred till next General Meeting.

The Chairman announced that the Candidates balloted for had been unanimously elected, the names of these gentlemen being as follows:—

AS A MEMBER :—

Mr JOHN GRAHAM STEWART, C.E., B.Sc., Engineer, 17 Park Terrace, Glasgow.

AS GRADUATES :—

Mr FRANK R. BLAIR, Ship Draughtsman, 232 Renfrew Street, Glasgow.

Mr JAMES TURNBULL, Apprentice Mechanical Engineer, South Overdale, Langside, Glasgow.

THE THIRTY-FIFTH ANNUAL GENERAL MEETING of the INSTITUTION was held in the Hall of the Institution, 207 Bath Street, on Tuesday, the 26th April, 1892, at 8 P.M.

Mr ROBERT DUNDAS, M.Inst.C.E., President, in the Chair.

The Minute of General Meeting of 22nd March, 1892, was read and approved, and signed by the President.

Digitized by Google

The Treasurer's Annual Financial Statement, duly audited, was submitted, and unanimously adopted. A vote of thanks was awarded the Auditors.

On the motion of Professor JAMIESON, seconded by Mr CHARLES C. LINDSAY, the Railway Engineering Medal was unanimously awarded to Mr THOMAS M. BARR, M.Inst.C.E., for his paper on "The Renewal of Railway Viaducts and Bridges on the Northern Division of the Caledonian Railway, 1880-1888."

Premiums of Books were also unanimously awarded to the following gentlemen, for papers read, as follows :—

To Mr HENRY A. MAVOR, for his paper on "The Development of Electric Lighting."

To Professor ANDREW JAMIESON, F.R.S.E., etc., for his paper on "The Electric Lighting of Public Buildings;" and

To Mr JOHN LAIDLAW, for his paper on "Centrifugal Action in Practical Work."

The Election of Office-Bearers then took place :—

On the motion of the President, seconded by Mr George Russell, Mr DAVID J. DUNLOP was unanimously elected a Vice-President.

On the motion of the President, seconded by Mr C. C. Lindsay, Mr A. S. BIGGART was unanimously elected a Vice-President.

The Council having appointed Professor BARR as a Vice-President, in room of the late Professor Jenkins, this met with the unanimous approval of the Meeting.

By a majority of votes, the following gentlemen were elected Councillors, viz. :—Messrs ROBERT T. NAPIER, JAMES ROWAN, WILLIAM M'WHIRTER, SINCLAIR COUPER, and Prof. J. H. BILES.

The discussions of the following papers were proceeded with and terminated :—

On "Limes and Cements, their Nature and Properties," by Mr ALEXANDER M'ARA.

On "The Electric Motor," by Mr W. B. SAYERS.

On "A New System of Electrical Distribution and Transmission," by Mr RANKIN KENNEDY.

Digitized by Google

On "Priestman's Oil Engine," by Mr M. B. MOUNTAIN.

Votes of thanks were awarded the authors of the papers read.

The President intimated that the Candidates balloted for had been unanimously elected, the names of these gentlemen being as follows:—

AS A MEMBER:—

Mr ALEXANDER SHANKS, Jr., Mechanical Engineer, 43 Aytoun Road, Pollokshields.

AS A GRADUATE:—

Mr WALTER ROBB, Apprentice Engineer, 246 Main St., Shettleston.

Digitized by Google

TREASURER'S STATEMENT—1891-92.

GENERAL FUND.

Dr.					Cr.		
To Balance in Union Bank at close of Session 1890-91,			£496	17 0	*By* Amount paid Treasurer of House Committee as Institution's proportion of Expenditure, for Session 1891-92,...	£105	0 0
Subscriptions received:					Printing, ...	181	7 6
Session 1891-92, .	£737	0 0			Lithography, ...	34	12 0
Arrears of Previous Sessions,	42	10 0			Institution Medal, ...	10	0 0
	£779	10 0			Premiums for Papers, ...	19	0 10
Deduct Entry Money transferred to Building Fund, ..	10	0 0			Graduate Section Medal, ...	1	7 6
			769	10 0	Salary to Secretary, ...	150	0 0
Sales of Transactions, ...			8	7 11	Commission Collection of Arrears of Subscriptions, viz. :—		
Bank Interest, ...			4	4 5	For Session 1891-92, ... £451 0 0		
					For Previous Sessions, ... 42 10 0		
					£493 10 0 at 5 %	24	13 6
					Postages, ...	51	2 9
					Delivery of Annual Volumes, ...	6	14 5
					Stationery, Insurance, &c., ...	6	7 11
					New Books for Library, ...	21	10 4
					Binding Periodicals in Library, ...	8	3 0
					Printing Supplement to Library Catalogue, ...	10	0 1
					Reporting, &c., ...	12	14 6
					Cash to New Buildings Account to meet Interest on Loan, from Medal Funds, ...	16	0 0
					Petty Cash, ...	1	3 5
					Balance in Union Bank, ...	619	1 7
			£1278	19 4		£1278	19 4

Digitized by Google

MARINE ENGINEERING MEDAL FUND.

Dr.				Cr.			
To Balance in Union Bank at close of Session 1890 91, ...	£30	16	0	*By* Balance in Union Bank, ...	£42	13	10
Interest on Capital lent to New Buildings Account,	10	0	0				
,, Mortgage, Glasgow Corporation,	1	11	10				
Bank Interest, ...	0	6	0				
	£42	13	10		£42	13	10

RAILWAY ENGINEERING MEDAL FUND.

Dr.				Cr.			
To Balance in Union Bank at close of Session 1890-91, ...	£33	17	0	*By* Balance in Union Bank, ...	£40	16	1
Interest on Capital lent to New Buildings Account,	6	0	0				
,, Mortgage, Glasgow Corporation,	0	12	8				
Bank Interest, ...	0	6	5				
	£40	16	1		£40	16	1

GRADUATE MEDAL FUND.

Dr.				Cr.			
To Balance in Union Bank at close of Session 1890-91,	£4	14	1	*By* Balance in Union Bank, ...	£5	7	6
Interest on Mortgage, Glasgow Corporation,	0	12	8				
Bank Interest, ...	0	0	9				
	£5	7	6		£5	7	6

Digitized by Google

BUILDING FUND.

Dr.				Cr.		
To Balance in Union Bank at close of Session 1890-91,	£137	0	11	*By* Balance in Union Bank, ...	£199	17	9
Two Life Members at £20, ...	40	0	0				
Entry Money, ...	10	0	0				
Interest on Mortgage, Glasgow Corporation,	11	8	0				
Bank Interest, ...	1	8	10				
	£199	17	9		£199	17	9

NEW BUILDINGS ACCOUNT.

Dr.					Cr.			
To Capital to meet Cost of New Buildings, viz. :—					*By* Paid on New Buildings, ...			£2,047 8 1
From General Fund, ...	£542	15	7		Interest on Loans, viz.:—			
,, Marine Engineering Medal Fund, ...	351	11	2		To Marine Engineering Medal Fund,	£10	0	0
,, Railway Engineering Medal Fund, ...	213	13	3		,, Railway Engineering Medal Fund,	6	0	0
,, Building Fund, ...	939	8	1					16 0 0
				£2,047 8 1				
Cash received from General Fund to meet Interest on Loans, ...				16 0 0				
				£2,063 8 1				£2,063 8 1

GLASGOW, *15th April, 1892.*—WE have examined the foregoing Annual Financial Statement of Treasurer. the Accounts of the Marine and Railway Engineering Medal Funds, the Graduate Medal Fund, the Building Fund, and the New Buildings Account, and find the same duly vouched and correct, the Amounts in Bank being as stated.

(Signed) A. A. HADDIN, JOHN TURNBULL, Jr. } AUDITORS.

Digitized by Google

SUBSCRIPTION ACCOUNT.

Dr.					Cr.		
To Subscriptions due as per Roll:—					*By* Subscriptions received, as per Cash Book, viz.:—		
Arrears due at close of last Session, ...		£86 10 0			Arrears of Subscriptions previous to Session 1891-92, ...		£42 10 0
Deduct Irrecoverable, Deceased and placed on Suspense List, ..		42 0 0					
		£44 10 0			SESSION 1891-92:—		
Add elected at Annual General Meeting of 28th April, 1891, ...		5 0 0			382 Members at £1 10 0 —	£573 0 0	
				£49 10 0	5 New Members ,, 2 10 0 —	12 10 0	
SESSION 1891-92:—					7 ,, ,, 2 0 0 —	14 0 0	
407 Members at £1 10 0 —	£610 10 0				11 ,, ,, 1 10 0 —	16 10 0	
6 New Members ,, 2 10 0 —	15 0 0				28 Associates ,, 1 0 0 —	28 0 0	
7 ,, ,, 2 0 0 —	14 0 0				1 New Associate ,, 2 0 0 —	2 0 0	
11 ,, ,, 1 10 0 —	16 10 0				1 ,, ,, 1 10 0 —	1 10 0	
29 Associates ,, 1 0 0 —	29 0 0				179 Graduates ,, 0 10 0 —	89 10 0	
1 New Associate ,, 2 0 0 —	2 0 0						737 0 0
1 ,, ,, 1 10 0 —	1 10 0				Arrears due for Session 1891-92, ...	£52 10 0	
202 Graduates ,, 0 10 0 —	101 0 0				Arrears due for previous Sessions,	7 0 0	
			789 10 0				59 10 0
			£839 0 0				£839 0 0

BANK ACCOUNT.

Dr.			Cr.	
To Balances at close of Session 1890-91:—			*By* Amounts Drawn, Session 1891-92, ...	£285 9 6
General Fund, ...	£496 17 0		Balances in Union Bank, ...	907 16 9
Marine Engineering Medal Fund, ...	30 16 0			
Railway Engineering Medal Fund, ...	33 17 0			
Graduate Medal Fund, ...	4 14 1			
Building Fund, ...	137 0 11			
Amounts lodged, Session 1891-92, ...	483 14 10			
Interest, Session 1891-92, ...	6 6 5			
		£1,193 6 3		£1,193 6 3

38
Digitized by Google

CAPITAL ACCOUNT.

GENERAL FUND.

Loan to New Buildings Account, ...	£542 15 7		
Cash in Union Bank, ...	619 1 7		
		£1,161 17 2	

MARINE ENGINEERING MEDAL FUND.

Loan to New Buildings Account, ...	£351 11 2		
Mortgage, Glasgow Corporation, ...	50 0 0		
Cash in Union Bank, ...	42 13 10		
		444 5 0	

RAILWAY ENGINEERING MEDAL FUND.

Loan to New Buildings Account, ...	£213 13 3		
Mortgage, Glasgow Corporation, ...	20 0 0		
Cash in Union Bank, ...	40 16 1		
		274 9 4	

GRADUATE MEDAL FUND.

Mortgage, Glasgow Corporation, ...	£20 0 0		
Cash in Union Bank, ...	5 7 6		
		25 7 6	

BUILDING FUND.

Amount to New Buildings Account, ...	£939 8 1		
Mortgage, Glasgow Corporation, ...	360 0 0		
Cash in Union Bank, ...	199 17 9		
		1,499 5 10	

ARREARS OF SUBSCRIPTIONS.

Arrears due for Session 1891-92, ...	£52 10 0		
Do. previous Sessions, ...	7 0 0		
		59 10 0	
		£3,464 14 10	

Digitized by Google

DR. HOUSE EXPENDITURE ACCOUNT. (ABSTRACT 1891-92.) CR.

To Rents for Letting Rooms, ...				£87	10	0	*By* Balance due Treasurer	£4	7	8½
Amounts Received by Treasurer to meet Expenses, viz.:—							Interest on Bond, ...	117	0	0
From Institution of Engineers and Shipbuilders, ...	£105	0	0				Salary to Curator, ...	100	0	0
From Philosophical Society, ...	125	7	4½				Salary to Attendant at Library, Cleaning, &c., ...	52	15	11
				230	7	4½	Taxes, ...	25	0	11½
Balance due Treasurer, ...				39	18	6½	Feu-duty, ...	0	18	2
							Gas Rates, ...	16	7	6
							Water Rates, ...	5	11	8
							Coals, ...	7	1	6
							Insurance, ...	7	15	0
							Repairs, ...	18	3	10
							Stationery, &c., ...	2	13	8
				£357	15	11		£357	15	11

The Account of the House Committee is kept by Mr John Mann, C.A., Treasurer to the Committee, and is periodically audited by the Auditors appointed by the Institution and the Philosophical Society.

W. J. MILLAR, *Secretary to House Committee.*

Digitized by Google

Digitized by Google

DECEASED MEMBERS.

Mr THOMAS BLACKWOOD became a Member of the Institution in 1864, and was well known as a successful marine engineer and shipbuilder on the Clyde. Commencing as an apprentice engineer with Messrs Barr & M'Nab in Paisley, he sailed, while with that firm, as guarantee engineer in the "Lady Brisbane," afterwards the "Balmoral," a well-known river steamer. Soon after his apprenticeship terminated, he commenced business in 1846, with Mr Andrew Gordon as partner. Shipbuilding was afterwards added, and in 1860 the works were transferred to Port-Glasgow, where the firm of Blackwood & Gordon have continued to carry on successfully the work so early begun.

Mr Blackwood, amongst other improvements in marine engineering, endeavoured to introduce the use of spring loaded safety valves for marine boilers, which at that time were not recognised by the Board of Trade. This subject was afterwards taken up by a Committee of the Institution, and their report, drawn up from experimental investigations with spring loaded safety valves, is printed in the eighteenth volume of the Transactions.

It may be noted that Mr Blackwood's firm engined the "Strathleven," the first vessel devoted to the carriage of frozen meat from Australia.

Mr Blackwood was a Member of the first School Board of Port-Glasgow, and was a Magistrate of the Burgh and a Justice of Peace for the County. He was held in high esteem by his workmen and the community. Born at Inchinnan in 1819, he died at Port-Glasgow, 13th November, 1891.

Mr CHARLES C. BONE joined the Institution as a Member in 1883. After apprenticeship with Messrs Smith & Wharrie, Civil

Digitized by Google

Engineers and Land Surveyors, Glasgow, and attendance at the civil engineering classes, Glasgow University, under the late Professor Macquorn Rankine, Mr Bone became one of the engineering assistants in the Glasgow Corporation Water Works office. Some time afterwards he received an appointment with Messrs Bateman & Hill, C.E., Manchester, and was specially engaged with that firm during the construction of the Batley water works. Returning to the Glasgow Corporation Water Works, he shortly afterwards was appointed assistant engineer, which position he held until his death in Cape Colony, where he had been advised to go for restoration of health.

Mr Bone was born at Whithorn, Wigtownshire, in 1844, and died at Beaufort West, Cape Colony, on 16th May, 1892.

Mr JAMES CLINKSKILL joined the Institution as a Member in 1860. During Session 1869-70 he contributed a paper on "The Action of Loch Katrine Water on Domestic Boilers."

Mr Clinkskill was a native of Fife, and served his apprenticeship with Mr Scott, Millwright, Cupar. While in this employment he was sent to France to fit up some machinery. Later on he was connected with Messrs M'Dowall, Engineers, Johnstone; and about 1839 he entered into partnership with the late Mr Norman. The firm of Norman & Clinkskill continued till about the year 1862, when Mr Clinkskill retired, and devoted himself more especially to consulting engineering.

Mr Clinkskill took much interest in the Glasgow Mechanics' Institution, holding office on its directorate. He died at Glasgow on 11th March, 1892, aged 82 years.

Mr ALFRED A. R. CLINKSKILL joined the Graduate Section of the Institution in 1881. He was for a time a member of Council of the Section.

He was at first in the engineering works of Messrs John Norman & Co., and afterwards in those of Messrs James Copeland & Co. A

Digitized by Google

few years ago he became associated with his father, Mr James Clinkskill, in his business as a valuating and consulting engineer.

Mr Clinkskill died on 31st January, 1892, from the effects of an accident, aged 31 years.

Mr A. C. H. DEKKE, of Bergen, Norway, joined the Institution as a Member in 1866.

He served his apprenticeship as a shipbuilder in Bergen, and in 1852 visited Sweden, Britain, and America. Returning to Bergen, he became partner with the owner of the yard, Mr Brunchorst, with whom he had served his apprenticeship. Starting in business on 1st January, 1854, he by degrees extended his interest in the business, until, at his death, he was sole owner.

Mr Dekke was for many years a member of the Bergen Town Council, and was a member of the juries appointed to deal with exhibits at exhibitions at Bergen, Copenhagen, and Paris.

He was Commander, second class, of the Order of St. Olaf, Knight of the Legion d'Honneur, and Knight of the Order of Dannebrog.

Mr Dekke was born on the 22nd of July, 1832, and died on the 22nd of May, 1892.

Mr ANDREW GALLOWAY joined the Institution as a Member in 1862.

He was born near Maybole in 1824, and served his apprenticeship as an engineer with Mr Derment, Ayr, and was afterwards for a time in the office of Messrs Granger & Miller, Edinburgh.

Mr Galloway's career as an engineer has been wholly identified with the Glasgow and South-Western Railway, and a large part of the permanent works of its various lines are from his designs; amongst them are the Bridge at Ballochmyle and the Thornhill Tunnel.

He designed and carried out the Ayr and Dalmellington and the Dumfries and Castle-Douglas Railway lines.

Subsequently he was appointed resident engineer, and on the

Digitized by Google

death of Mr William Johnstone* he was appointed engineer-in-chief. Retiring in 1886, he has since held the position of consulting engineer to the Company.

Mr Galloway, from his great ability and experience, was frequently consulted by various railway companies.

Mr Galloway died at Kilmarnock on 19th December, 1891.

Mr EDMUND J. GUMPRECHT joined the Institution in 1887 as a Graduate. He was born in April, 1868, and was educated at Glasgow, and at the Loretto School, Musselburgh.

In September, 1884, he entered on his apprenticeship as an Engineer with Messrs Mirrlees, Watson & Co., Glasgow. In 1891, on account of his health, he went to San Francisco, but returned again to this country, dying shortly after reaching Liverpool, on 28th January, 1892.

Mr Gumprecht was devoted to his profession, and possessed sterling qualities of character.

Mr EBENEZER KEMP joined the Institution as a Member in 1872. From 1873 to 1879 Mr Kemp held office in the Council, being Vice-President during Sessions 1875-76 and 1876-77, and at Annual Meeting of the Institution, held on 23rd April, 1889, he was unanimously elected President, which office he held during Sessions 1889-90 and 1890-91.

Besides the presidential addresses delivered at the opening of these Sessions, Mr Kemp contributed two papers, the first of these being an important one, on "The Compounding of Locomotive and other Non-Condensing Engines," read April, 1876.

During the Session 1888-89 he contributed a paper on "Compound Marine Boilers."

* It may be of interest to state that the Mr William Johnstone referred to here was one of the original Members of the Institution, and was President at the date of Mr Galloway's admission. The two presidential addresses which he delivered, and published in Volumes V. and VI. of the Institution "Transactions," contain much valuable information regarding the progress of railway engineering at that time.

Digitized by Google

Besides communicating these, Mr Kemp frequently took part in the discussion of the various papers read, and was much interested in the progress of the Institution.

In October, 1890, he was appointed to represent the Institution on the Board of Management of the Glasgow and West of Scotland Technical College as one of the Governors, and at the time of his death held office on the Council of the Philosophical Society of Glasgow. He was also a member of the British Corporation for the Survey and Registry of Shipping.

Mr Kemp was born in Glasgow in 1831, and served his apprenticeship at Hydepark Works. After which, about 1852, he went to Messrs Scott & Sinclair's Works, Greenock. In 1855 he was with Mr John Barr, Kelvinhaugh; and from 1857 to 1859 he was chief draughtsman with Messrs A. & J. Inglis. From 1859 to 1871 he was manager to Messrs Gourlay Brothers, Dundee. Mr Kemp, in his presidential address to the Institution, Session 1890-91, gave an interesting sketch of his own connection with marine engineering, in which a valuable comparison was made between past and present practice in this great industry. Leaving Dundee, Mr Kemp joined the firm of Alexander Stephen & Son in 1871, when they were removing from the premises in Kelvinhaugh to open new works at Linthouse, and add engineering to their previous shipbuilding business. Here Mr Kemp designed and superintended the erection of the large engine and boiler shops required by the firm for their extensive business, and which Mr Kemp's great technical and practical ability assisted so much in extending. Amongst the engineering specialties introduced by Mr Kemp, that of the compound, or high and low temperature marine boiler, may specially be noticed, a paper upon which, as already stated, was read before the Institution, Session 1888-89. In this invention, the hot gases passing from the steam or high temperature boiler are carried through successive divisions of the low temperature boiler. The water in its coldest state enters the low temperature boiler where the exhausted gases are passing off to the uptake, and pursues its course through the hotter divisions of the boiler, thence passing in a highly heated state into the high temperature boiler to be con-

Digitized by Google

verted into steam. The compound boiler has been very successful in the S.S. "Caloric" referred to in the paper, and is at present being fitted at Linthouse into a much larger steamer.

Mr Kemp's genial manner endeared him to all, while his marked ability and high character commanded their respect, the sad circumstances of his death intensifying those feelings of regret at the great loss sustained by his relatives and numerous friends.

Mr Kemp died while sea bathing, near Rothesay, on 30th July, 1892.

Mr DAVID LAIDLAW was connected with the Institution almost from its foundation, having become a Member in 1858. During Session 1860-61, he read a paper on "Gas Engineering," containing important details of work carried out by his firm, Messrs R. Laidlaw & Son, and containing many valuable suggestions as to the most efficient methods of meeting difficulties when carrying out works, both at home and abroad.

Mr Laidlaw was assumed as a partner in his father's business in 1837. The business was at that time in Edinburgh, and consisted principally in the manufacture of gas fittings. In 1841 a branch was started in Glasgow, and a few years later works were started there for the manufacture of gas tubing and fittings, and which was placed under the superintendence of Mr David Laidlaw.

Mr Laidlaw's energy soon led to the extension of these, and the opening of new works for the casting of gas and water pipes, and wrought iron work, and for several years he was frequently abroad superintending the erection of important works for gas and water supply.

Mr Laidlaw had retired from active business for some years, and resided at Chaseley, Skelmorlie, where he died in the 82nd year of his age.

•

Mr JOHN M'MILLAN joined the Institution as a Member in 1865, at which time the Scottish Shipbuilders' Association, of which he was an Original Member and Honorary Councillor, became incorporated with the Institution.

Mr M'Millan's firm—that of Archibald M'Millan & Son—dates

Digitized by Google

from the year 1834, the works being situated on the river Leven, at Dumbarton. In 1846 a dockyard was added, and the business much extended, and the building of large sailing ships was made a specialty.

The introduction of iron, and latterly steel, as a substitute for wood, caused changes in the methods and machinery required for enabling the firm to construct some of the largest and fastest sailing ships, as well as many important additions in steam shipping.

At the exhibition held in London by the Worshipful Company of Shipwrights, the firm obtained the first prize for the model of the "Coriolanus," one of their fast clipper ships, built in 1877.

Mr M'Millan was much respected by his employees, who in 1884 presented him with his portrait on the occasion of the jubilee of the firm in that year. He died at Dumbarton on 21st September, 1891, aged 76.

Mr ROBERT MURRAY became a Member of the Institution in 1877. He was born in 1828, at Greenock, and served his time as an engineer with Messrs Caird & Co., of Greenock, remaining with that firm for a number of years after his apprenticeship was finished. After being shop foreman and draughtsman in some of the Clyde engineering works, he was appointed chief engineering draughtsman to Mr John Key, of White Bank Engine Works, Kirkcaldy, and afterwards went to assume a similar position at the North-Eastern Marine Engine Works, Sunderland. After leaving this firm he took charge of the drawing office at Messrs Oswald & Co.'s yard, also at Sunderland; and in 1871 left to take the management of the Ousbourne Engine Works, Newcastle-on-Tyne. Shortly after, he was appointed manager by Mr Martin Samuelson, of the Albert Dock Engine Works, Hull, and on the retirement of that gentleman, and the purchase of the works by Messrs Amos & Smith, his services were retained. In 1888 he severed his connection with this firm, and commenced business as a consulting engineer and marine surveyor in Hull, in which town he had been settled for about twenty years, and where he was well known both in engineering circles and in local matters. He died on January 13th, 1892.

Digitized by Google

Mr JOHN PHILLIPS was an Associate of the Scottish Shipbuilders' Association, and, on the amalgamation of this Association with the Institution of Engineers, he became an Associate of the joint body.

Mr Phillips was born at Alexandria, Dumbartonshire, in the year 1828, and was for a time in one of the printing and turkey-red works of that district, where he learned the trade of block-cutting for the printing of the cloth, as carried out before the engraved copper rollers came into use.

He came to Glasgow in 1850, and started a business of his own for designing and making the wood-printing blocks, and about the year 1854 he commenced, along with Mr Thomas Barclay, the business of coppersmith, brassfounder, etc., and successfully managed the same until his death.

Mr Phillips was an active member of the Incorporation of Hammermen and the Trades House, also of the Weavers' Society of Anderston, holding important offices in these bodies.

Mr Phillips died on 9th July, 1892.

Mr ALEXANDER SMITH, of the Eglinton Engine Works, Glasgow, was one of the Original Members of the Institution, and held office as Councillor during Sessions 1862-63 and 1863-64.

Mr Smith was born near Kilmaurs, Ayrshire, on 12th March, 1817. He served his apprenticeship with his father, who was an engineer and millwright in Paisley. On the death of his father, Mr Smith, although only 21 years of age, carried on the business successfully, and afterwards assumed his brother William into partnership, under the firm of A. & W. Smith, the works being removed to Glasgow about thirty-five years ago. The business engaged in up to that time was mainly the construction of agricultural machinery and weighing machines, but later on the home trade was gradually replaced by the manufacture of sugar-making machinery for the colonies; and this industry, together with bridge and pier construction, have of late years formed the specialties of the firm.

Mr Smith resided at Innellan during summer, and was a J.P. for

Digitized by Google

Argyleshire; and, although not taking an active part in municipal affairs, he interested himself in various charitable matters.

He died at his residence of Auchentroig, near Bucklyvie, on the 7th December, 1891.

Mr ALEXANDER STEVEN joined the Institution in 1881, and held office as Councillor during Sessions 1883-84 and 1884-85.

Mr Steven was born at Cairnryan in the year 1823, and after serving an engineering apprenticeship, held an appointment for a short time in Trinidad. Returning home, he commenced business with his brother, under the firm of A. & P. Steven, as engineers, Provanside Works, Glasgow.

Mr Steven identified himself much with local charitable work, serving for some years on the City Parochial Board, and was Convener of the Finance Committee of that body at the time of his death.

Mr Steven died at Glasgow on 22nd November, 1891.

Professor JAMES THOMSON joined the Institution in 1874, and was elected an Honorary Member in 1891. He held office as Councillor during Sessions 1875-76 and 1876-77, as Vice-President during the following two Sessions, and as President during the Sessions 1884-85 and 1885-86. Besides his Presidential Address, Prof. Thomson contributed papers upon "Comparisons of Similar Structures as to Elasticity, Strength, and Stability," and on "The Ranging of Railway Curves," and at a much earlier period, he laid before the Institution, in 1858, his views upon hydraulic engineering in a paper entitled a "Centrifugal Pump with Exterior Whirlpool."

Professor Thomson's early career was identified with civil and mechanical engineering. After serving his apprenticeship with Sir William Fairbairn, he carried on the practice of civil and mechanical engineering, and held the office of Engineer to the Belfast Water Commissioners. His contributions to the science and practice of hydraulic engineering are well known.

In 1857 he was appointed Professor of Civil Engineering, in

Digitized by Google

Queen's College, Belfast, and from 1873 till 1889 held a similar appointment in Glasgow University, when, owing to failure of the eyesight, he had to seek retirement.

Professor Thomson contributed many important, original papers on scientific subjects to various societies, one of which, entitled the "Lowering by Pressure of the Freezing Point of Water," communicated in 1847 to the Royal Society of Edinburgh, was of very special value. He was elected a Fellow of the Royal Society in 1877, and held honorary degrees from various universities.

Professor Thomson's courteous and kindly manner, combined with the interest he showed in the work of others, endeared him to those with whom he was associated. He was born at Belfast in 1822, and died at Glasgow, on 8th May, 1892.

Mr W. W. URQUHART, of Blackness Foundry, Dundee, joined the Institution as a Member in 1865, but from his residence in Dundee was unable to take an active part in the Sessional work. After studying at St. Andrew's and Glasgow Universities, he served his apprenticeship with Messrs John Kerr & Co., of Dundee, and some years after he commenced business as an engineer in partnership with Mr Joseph Lindsay in 1865, the copartnership existing until Mr Urquhart's death. Mr Urquhart died on 17th April, 1891, aged 50.

Mr JOHN WEILD was a member of the Scottish Shipbuilders' Association from its commencement, 1860—61, and became a member of the Institution in 1865, when the Association was incorporated with the Institution of Engineers. Mr Weild was born at Annan, Dumfries-shire, and had an early training in shipbuilding and shipping matters. He came to Glasgow about 1844, and since the year 1852 was connected with the Underwriters' Association. He held the important office of Underwriters' Surveyor; also that of Surveyor and Wreck Agent. Mr Weild's important services to the Association were much appreciated, and it was largely due to his representations that the efficient methods of salvage now employed have been brought about. He died on 15th July, 1891.

Digitized by Google

REPORT OF THE LIBRARY COMMITTEE.

THE Library continues to receive attention, and the long arrears of work may now be said to have been overtaken. The numbers of the journals and transactions of the various societies which exchange publications with the Institution are bound as soon as possible, to prevent numbers being lost.

During the present session, 453 books have been issued to 380 borrowers, not including the books used for reference.

The additions to the Library during the session include 56 volumes by purchase, 15 volumes and 7 pamphlets by donation, and 70 volumes and 111 parts received in exchange for the Transactions of the Institution. The donations have more than equalled the average of former years. Of the periodical publications received in exchange, 17 are issued weekly, 3 fortnightly, 9 monthly, and 3 quarterly. The greater number of these are regularly bound :— 76 volumes were bound during the year.

Members of the Institution of all grades are reminded that they have the privilege of using, for reference, the Library of the Philosophical Society.

DONATIONS TO LIBRARY.

Lloyds' Register of British and Foreign Shipping. From the Committee of Lloyds.

A Short Treatise on Building Materials, by Professor Scorgie. From the Author.

Report of the British Association, Leeds Meeting, 1890. From the Association.

Glasgow University Calendar, 1891—92. From the University.

Digitized by Google

The Elder Park, Govan. From Mrs John Elder.

Time Reckoning for the 20th Century, by Fleming Sandford; 8vo pamphlet, 1889. From the Author.

Report of a Visit to several Continental and English Technical Schools, by a Deputation from the Manchester Technical School; 8vo pamphlet, 1891. From the Council of Manchester Technical School.

Engineering Education in the British Dominions; 8vo, London, 1891. From the Institution of Civil Engineers.

Report of the Hydraulic Engineer on the Water Supply of Queensland; folio, 1891. From J. B. Henderson, Esq.

Vital, Social, and Economic Statistics of the City of Glasgow, 1885—1891, by James Nicol. From the Author.

Report of the Chief of the Bureau of Steam Engineering, Navy Department, Washington, 1891. From Navy Department.

Chemin de fer de Strasburg à Bale, by P. D-Bazaine; 1892. From Société Industrielle de Mulhouse.

Trans. Edinburgh Architectural Association. From the Association.

Timber and Wood Working Machinery. From the Proprietors.

Annals of Lloyds' Register. From the Committee of Lloyds.

On an Enlarged Waterway between the Great Lakes and the Atlantic Seaboard, by E. L. Corthell, C.E. From the Author.

Report, British Association, Cardiff Meeting, 1891.

Massachussetts Institute of Technology; Report and Annual Catalogue, 1891-92; 8vo. Boston, 1892. From the Institute.

Electrical Engineering, with Special Reference to Electric Lighting, by W. C. Mountain; 8vo. Newcastle-upon-Tyne. From the Author.

Romano and Fiandra, Studio Preliminare a programma di progetto di un Canale Intermarittimo Venezia—Spezia (with Plates). From the Authors.

Strength and Properties of Materials, by W. G. Kirkaldy. From the Author.

Proceedings Nova Scotian Inst. of Science, Halifax, Nova Scotia; 2nd Series; Vol. I., part 1.

Digitized by Google

The Development of the American Rail and Track, by J. E. Watkins. From the Smithsonian Institution.

Steam Boilers: their Defects, Management, and Construction; 2nd edition; by R. D. Munro. From the Author.

Engineers' and Contractors' Illustrated Book of Prices, 1892—93. From Messrs E. & F. N. Spon.

Calendar of Glasgow and West of Scotland Technical College for 1892—93. From the Governors.

NEW BOOKS ADDED TO THE LIBRARY.

Bodmer, G. R., Hydraulic Motors: Turbines and Pressure Engines; 8vo. London, 1889.

Biggs, C. H. W., First Principles of Electrical Engineering; 8vo. London, no date.

Bonney, G. E., The Electro-Platers' Handbook; 12mo. London, 1891.

Ede, George, The Management of Steel; 6th edition; 12mo. London, 1891.

"Electrician" Primers, 2 vols. Vol. I., Theory; Vol. II., Practice; 8vo. London, 1891.

Eddy, Henry T., Researches in Graphic Statics; 8vo. New York, 1878.

Ewing, J. A., Magnetic Induction in Iron and other Metals; 8vo. London, 1892.

Findlay, George, The Working and Management of an English Railway; 4th edition; 8vo. London, 1891.

Fleming, J. A., Short Lectures to Electrical Artisans; 3rd edition; 8vo. London, 1890.

Fletcher, W., The History and Development of Steam Locomotion on Common Roads; 8vo. London, 1891.

Garnett, W., A Treatise on Elementary Dynamics for the use of Colleges and Schools; 5th edition; 8vo. Cambridge, 1889.

Garnett, W., An Elementary Treatise on Heat; 5th edition; 8vo. Cambridge, 1889.

Digitized by Google

Gore, J. H., Geodesy; 8vo. London, 1891.

Graham, R. H., Geometry of Position; 8vo. London, 1891.

Greenhill, A. G., Differential and Integral Calculus, with Applications; 2nd edition; 8vo. London, 1891.

Griffin's Year Book of Scientific and Learned Societies. London, 1892.

Harcourt, L. F. Vernon., Achievements in Engineering during the last Half Century; 8vo. London, 1891.

Hasluck, Paul N., Milling Machines and Processes: A Practical Treatise on Shaping Metals by Rotary Cutters; 8vo. London, 1892.

Hatch, F. H., An Introduction to the Study of Petrology: The Igneous Rocks; 8vo. London, 1891.

Hellyer, S. S., Principles and Practice of Plumbing; 8vo. London, 1891.

Hiorns, A. H., Mixed Metals or Metallic Alloys; 8vo. London, 1890.

Kimball, A. L., The Physical Properties of Gases; 8vo. London, 1890.

Koechlin, Maurice, Applications de la Statique Graphique, with vol. of Plates; 8vo. Paris, 1889.

Meldola, R., Coal, and what we get from it; 8vo. London, 1891.

Newman, John, Earthwork Slips and Subsidences upon Public Works; 8vo. London, 1890.

Phillips, H. J., Engineering Chemistry; 8vo. London, 1891.

Phillips, W. B. and Ernst Prochaska, Wedding's Basic Bessemer Process; 8vo. New York, 1891.

Planté, Gaston, The Storage of Electrical Energy and Researches in the Effects created by Currents combining Quantity with High Tension; Translated by P. B. Elwell; 8vo. London, 1887.

Preece, W. H. and J. Maier, The Telephone; 8vo. London, 1891.

Preece, W. H. and J. Sivewright, Telegraphy; 9th edition; 12mo. London, 1891.

Digitized by Google

Ritter, August, Elementary Theory and Calculation of Iron Bridges and Roofs; 3rd edition; Translated by H. R. Sankey; 8vo. London, 1879.

Rivington's Building Construction, Part 4; 8vo. London, 1891.

Robinson, W., Gas and Petroleum Engines; 8vo. London, 1890.

Roscoe, Sir H. E. and C. Schorlemmer, A Treatise on Chemistry: Vol. III.: Organic Chemistry, Part 3; 8vo. London, 1891.

Russell, S. A., Electric Light Cables and the Distribution of Electricity; 8vo. London, 1891.

Salomons, Sir David, Electric Light Installations, and the Management of Accumulators; 6th edition; 8vo. London, 1891.

Seaton, A. E., A Manual of Marine Engineering; 10th edition; 8vo. London, 1891.

Slingo, W., and A. Brooker, Electrical Engineering; 8vo. London, 1891.

Stretton, C. E., Safe Railway Working: A Treatise on Railway Accidents, their Cause and Prevention; 2nd edition; 8vo. London, 1891.

Taylor, E. B. and G. M. Taylor, Water-Pipe Discharge Diagrams; ob. folio. London, 1891.

Thompson, S. P., The Electromagnet and Electromagnetic Mechanism; 8vo. London, 1891.

Thomson, Sir W., Popular Lectures and Addresses—in 3 vols.—Vol. III., Navigational Affairs; 8vo. London, 1891.

Thorpe, T. E., A Dictionary of Applied Chemistry, Vols. I.-II.; 8vo. London, 1890-91.

Thurston, R. H., A Handbook of Engine and Boiler Trials, and of the Indicator and Prony Brake; 8vo. New York, 1890.

Thurston, R. H., Heat as a Form of Energy; 8vo. London, 1890.

Ward, H. M., Timber and some of its Diseases; 8vo. London, 1889.

Worthington, A. M., Dynamics of Rotation: An Elementary Introduction to Rigid Dynamics; 8vo. London, 1892.

Whitham, J. M., Descriptive Treatise on Constructive Steam-Engineering; 8vo. New York, 1891.

Digitized by Google

Screws and Screw Making, by Britannia Company; 8vo. Colchester, 1891.

Thompson, S. P., Electricity in Mining; 8vo. London, 1891.

Pollard and Dudeboat, Théorie du Navire; 3 vols.; 8vo. Paris, 1890-91.

Sennett, R., The Marine Steam Engine; 2nd ed.; 8vo. Lond., 1885.

THE INSTITUTION EXCHANGES TRANSACTIONS WITH THE FOLLOWING SOCIETIES, &C. :—

Bristol Naturalists' Society, Bristol.

Institution of Civil Engineers.

Institution of Civil Engineers of Ireland.

Institution of Mechanical Engineers.

Institution of Naval Architects.

Institute of Marine Engineers.

Institute of Mining and Mechanical Engineers—North of England.

Iron and Steel Institute.

Liverpool Polytechnic Society.

Liverpool Engineering Society.

Literary and Philosophical Society of Manchester.

Lloyds Register of British and Foreign Shipping.

Manchester Association of Engineers.

Midland Institute of Mining, Civil, and Mechanical Engineers.

Mining Institute of Scotland.

North-East Coast Institution of Engineers and Shipbuilders.

Patent Office, London.

Philosophical Society of Glasgow.

Royal Dublin Society.

Royal Scottish Society of Arts.

Shipmasters' Society.

South Wales Institute of Engineers.

Society of Arts.

Society of Engineers.

The Sanitary Institute of Great Britain.

The Hull and District Institution of Engineers and Naval Architects.

The Junior Engineering Society.

Digitized by Google

American Society of Civil Engineers.
American Society of Mechanical Engineers.
Association des Ingénieurs, Belgium.
Austrian Engineers' and Architects' Society, Vienna.
Bureau of Steam Engineering, Navy Department, U.S.A.
Engineers' and Architects' Society of Naples.
Geological Survey of Canada.
Master Car Builders' Association, U.S.A.
Royal Academy of Sciences, Lisbon.
Royal Society of Tasmania.
Smithsonian Institution, U.S.A.
Société des Ingénieurs Civils.
Société Industrielle de Mulhouse.
Société d'Encouragement pour l'Industrie Nationale.
Société des Anciens Elèves des Ecôles Nationales d'Arts et Métiers
Société des Sciences Physiques et Naturelles de Bordeaux.
The Canadian Institute, Toronto.
The Canadian Society of Civil Engineers.
The Colliery Engineer, U.S.A.
The Engineering Association of New South Wales.
The Technical Society of the Pacific Coast, U.S.A.

COPIES OF THE TRANSACTIONS ARE FORWARDED TO THE FOLLOWING COLLEGES, LIBRARIES, &C.:—

Cornell University, U.S.A.
Dumbarton Free Library.
Glasgow University.
Lloyds' Office, London.
Mercantile Marine Service Association, Liverpool.
M'Gill University, Montreal.
Mitchell Library, Glasgow.
Stevens Institute of Technology, U.S.A.
Stirling's Library, Glasgow.
The Glasgow and West of Scotland Technical College.
The Yorkshire College, Leeds.

Digitized by Google

Trinity College, Dublin.
Underwriters' Rooms, Glasgow.
Do. Liverpool.
University College, London.

PUBLICATIONS RECEIVED PERIODICALLY IN EXCHANGE FOR INSTITUTION TRANSACTIONS:—

Colliery Guardian.
Engineering.
Indian Engineering.
Industries.
Iron.
Iron and Coal Trades' Review.
Iron and Steel Trades' Journal.
Journal de l'Ecole Polytechnic.
L'Industria.
Machinery.
Nature.
Portfeuille Economique des Machines.
Revue Industrielle.
Revue Maritime et Coloniale, Paris.
Stahl und Eisen.
The American Manufacturer and Iron World.
The Contract Journal.
The Engineer.
The Indian Engineer.
The Journal of Commerce.
The Machinery Market.
The Marine Engineer.
The Mechanical World.
The Practical Engineer.
The Steamship.
Cassier's Magazine.

ARCH. BARR, D.Sc.,
Hon. Librarian and Convener.

Digitized by Google

The Library of the Institution, at the Rooms, 207 Bath Street, is open daily from 9-30 a.m. till 8 p.m.; on Meeting Nights of the Institution and Philosophical Society, till 10 p.m.; and on Saturdays till 2 p.m. Books will be lent out on presentation of Membership Card to the Librarian.

Members have also the privilege of consulting the Books in the Library of the Philosophical Society.

The use of Library and Reading Room is open to Members Associates, and Graduates.

The Library is open during Summer from 9-30 a.m. till 5 p.m. and on Saturdays till 2 p.m.

The Portrait Album lies in the Library for the reception of Members' Portraits.

Members are requested when forwarding Portraits to attach Signature to bottom of Carte.

The Library Committee are desirous of calling the attention of Readers to the "Recommendation Book," where entries can be made of titles of books suggested as suitable for addition to the Library.

Copies of Library Catalogue and Supplement, price 6d; or separately, 3d each, may be had at the Library, 207 Bath Street, or from the Secretary.

A List of the Papers read and Authors' Names, from the First to the Thirty-third Sessions, will be found in Vol. XXXIII.*

As arranged by the Council, a Register Book for Graduates now lies in the Library for the inspection of Members, the object being to assist Graduates of the Institution in finding suitable appointments.

Digitized by Google

Annual Subscriptions are due at the commencement of each Session, viz. :—

MEMBERS, £1 10s; ASSOCIATES, £1 ; GRADUATES, 10s.

LIFE MEMBERS, £20; LIFE ASSOCIATES, £15.

Membership Application Forms can be had at the Secretary's Office, 261 West George Street, or from the Librarian at the Rooms, 207 Bath Street.

The Council, being desirous of rendering the Transactions of the Institution as complete as possible, earnestly request the co-operation of Members in the preparing of Papers for reading and discussion at the General Meetings.

Early notice of such Papers should be sent to the Secretary, so that the dates of reading may be arranged.

Copies of the reprint of Vol. VII., containing paper on "The Loch Katrine Water Works," by Mr J. M. Gale, C.E., may be had from the Secretary; price to Members, 7/6.

Members of this Institution, who may be temporarily resident in Edinburgh, will, on application to the Secretary of the Royal Scottish Society of Arts, at his Office, 117 George Street, be furnished with Billets for attending the Meetings of that Society.

The Meetings of the Royal Scottish Society of Arts are held on the 2nd and 4th Mondays of each Month, from November till April, with the exception of the 4th Monday of December.

Digitized by Google

LIST

OF

HONORARY MEMBERS, MEMBERS, ASSOCIATES, AND GRADUATES

OF THE

Institution of Engineers and Shipbuilders in Scotland

(INCORPORATED),

AT CLOSE OF SESSION 1891-92.

HONORARY MEMBERS.

Professor CHARLES PIAZZI SMYTH, LL.D., F.R.S.E., Clova, Ripon.

Lord KELVIN, A.M., LL.D., D.C.L., F.R.SS.L. and E., Professor of Natural Philosophy in the University of Glasgow.

Professor JOHN TYNDALL, D.C.L., LL.D., F.R.S., &c., Hindhead House, Haslemere.

The DUKE OF SUTHERLAND, K.G., F.R.S., Trentham, Stoke-upon-Trent.

Lord ARMSTRONG, C.B., LL.D., D.C.L., F.R.S., Newcastle-on-Tyne.

Professor H. VON HELMHOLTZ, Berlin.

Lord BRASSEY, K.C.B., D.C.L., 4 Gt. George Street, Westminster, London, S.W.

Sir HENRY BESSEMER, F.R.S., 165 Denmark Hill, Surrey.

Lord BLYTHSWOOD, Blythswood, Renfrewshire.

Professor A. B. W. KENNEDY, F.R.S., 19 Little Queen Street, Westminster, London, S.W.

Sir DIGBY MURRAY, Bart., Board of Trade, London, S.W.

Digitized by Google

MEMBERS.

DATE OF ELECTION.			
1889, Nov. 19:	William	Adam,	42 Garturk St., Govanhill
1889, Apr. 23:	James	Adamson,	St. Quivox, Stopford Road, Upton Manor, Essex.
1883, Mar. 20:	Geo. A.	Agnew,	2 Osborne Terrace, Govan, Glasgow.
1889, Oct 22:	William	Aitchison,	Vryheid Lust Plantation, Demerara.
1860, Dec. 26:	William	Aiton,	Sandford Lodge, Peterhead.
1887, Jan. 25:	Prof. Thomas	Alexander,	Trinity College, Dublin.
1872, Feb. 27:	A. B.	Allan,	Burgh Surveyor, Burgh Chambers, Govan, G'gow.
1890, Jan. 21:	John M.	Allan,	Oak Bank, Shandon.
1869, Jan. 20:	William	Allan,	Scotia Engine Works, Sunderland.
1864, Dec. 21:	James B.	Alliott,	The Park, Nottingham.
G. 1880, Feb. 24: M. 1889, Oct. 22:	George	Almond,	Hordern Cottage, Belmont, near Bolton.
G. 1865, Feb. 15: M. 1877, Dec. 18:	Wm. M.	Alston,	50 Sardinia Terrace, Hillhead, Glasgow.
1886, Dec. 21:	Alexander	†Amos,	Sydney, New South Wales.
1886, Dec. 21:	Alexander	†Amos, Jun.,	247 George Street, Sydney, New South Wales.
G. 1874, Feb. 24: M. 1880, Nov. 23:	James	Anderson,	100 Clyde St., Glasgow.
1860, Nov. 28:	Robert	Angus,	Lugar Ironworks, Cumnock.
1887, Dec. 20:	W. David	Archer,	Edin Villa, Dalmuir.
1875, Dec. 21:	Thomas A.	Arrol,	18 Blythswood Square, Glasgow.
1885, Jan. 27:	Sir Wm.	†Arrol, LL.D.,	10 Oakley Ter., Glasgow.

Names marked thus * were Members of Scottish Shipbuilders' Association at Incorporation with Institution, 1865.

Names marked thus † are Life Members.

Digitized by Google

Original:	David	Auld,	65 Rochester St., Glasgow.
1885, Apr. 28:	John	Auld,	Whitevale Foundry, Glasgow.
1880, Feb. 24:	William N.	Bain,	40 St. Enoch Square, Glasgow.
1891, Apr 28:	Wm. P. C.	Bain,	Lochrin Iron Works, Coatbridge.
1881, Oct. 25:	Allan W.	Baird,	Eastwood Villa, St. Andrew's Drive, Pollokshields, Glasgow.
1887, Nov. 22:	Michael R.	Barnett,	Greenbank, Borwick, Carnforth, Lancashire.
1876, Jan. 25:	James	Barr,	Underwood House, Paisley.
1882, Mar. 21:	Prof. Archd.	Barr, D.Sc., *(Vice-President and Honorary Librarian.)*	Royston, Dowanhill.
1881, Mar. 22:	George H.	Baxter,	Barclay, Curle, & Co., Stobcross Engine Works, Glasgow.
G. 1877, Nov. 20: M. 1887, Apr. 6:	J. T.	Baxter,	9 Brighton Terrace, Govan, Glasgow.
1875, Jan. 26:	Charles	Bell,	The Birches, Stirling.
	David	*Bell,	19 Eton Place, Hillhead, Glasgow.
1880, Mar. 23:	Imrie	Bell,	36 Kersland Terrace, Hillhead, Glasgow.
1889, Jan. 22:	W. Reid	Bell,	204 St. Vincent Street, Glasgow.
1890, Jan. 21:	R. J.	Beveridge,	20 Albert Drive, Crosshill, Glasgow.
G. 1883, Mar. 20: M. 1884, Nov. 25:	Andrew S.	Biggart, *(Member of Council.)*	Baltic House, Baltic Street, Bridgeton, Glasgow.
1884, Mar. 25:	Prof. John Harvard	Biles,	Glasgow University, Glasgow.
1890, Mar. 25:	John R.	Bird,	10 Morrison St., Glasgow.

Digitized by Google

1866, Dec. 26:	Edward Blackmore,	2 Tavistock Road, Westbourne Park, London, W.
1869, Feb. 17:	Geo. M'L. Blair,	127 Trongate, Glasgow.
G. 1884, Jan. 22: M. 1889, Oct. 22:	H. MacLellan Blair,	Clutha Iron Works, Vermont Street, Glasgow.
1867, Mar. 27:	James M. Blair,	Williamcraigs, Linlithgowshire.
1883, Oct. 23:	William L. Bone,	Ant and Bee Works, West Gorton, Manchester.
1891, Jan. 27:	Wm. Bow,	Thistle Works, Paisley.
1874, Jan. 27:	Howard Bowser,	13 Royal Crescent, W., Glasgow.
1890, Mar. 25:	George R. Brace,	William Denny & Sons, Dumbarton.
1880, Mar. 23:	James Brand,	109 Bath Street, Glasgow.
1891, Dec. 22:	Henry Brier,	47 Dixon Avenue, Glasgow.
G. 1873, Dec. 23: M. 1884, Jan. 22:	James Broadfoot,	55 Finnieston St., Glasgow.
1865, Apr. 26:	Walter *Brock,	Engine Works, Dumbarton.
1890, Jan. 21:	Alex. F. G. Brown,	Swindrige Muir, Dalry.
1859, Feb. 16:	Andrew *Brown,	London Works, Renfrew.
G. 1876, Jan. 25: M. 1885, Nov. 24:	Andrew M'N. Brown,	Castlehill House, Renfrew.
G. 1879, Feb. 25: M. 1891, Oct. 27:	A. T. Brown,	18 Glencairn Drive, Pollokshields.
1886, Mar. 23:	George Brown,	Kirklee, Dumbarton.
G. 1886, Oct. 26: M. 1892, Jan. 26:	James Brown,	Engine Department Martinez, Rivas and Palmer, Bilbao, Spain.
1885, Apr. 28:	Walter Brown,	Castlehill, Renfrew.
G. 1874, Jan. 27: M. 1884, Jan. 22:	William Brown,	Houston Terrace, Paisley Road, Renfrew.
1880, Dec. 21:	William Brown,	Albion Works, Woodville Street, Govan, Glasgow.
1889, Dec. 17:	William Brown,	Glasgow Locomotive Works, Glasgow, S.S.

Digitized by Google

	1890, Mar. 25: William	Brown,	Old Hall, Kilmalcolm.
	1889, Dec. 17: W. Paton	Buchan,	36 Renfrew St., Glasgow.
	1860, Dec. 26: James C.	Bunten,	100 Cheapside St., Glasgow.
	1866, Apr. 26: Amedee	Buquet,	15 Chemiss, St. Martin, Pontoise, S. O. France.
G.	1872, Oct. 24: Hartvig	Burmeister,	Rahr & Raundrup, 1 Princess Street, Manchester.
M.	1885, Nov. 22:		
G.	1876, Dec. 19: Lindsay	Burnet,	Moore Park Boiler Works, Govan, Glasgow.
M.	1889, Oct. 22:		
	1880, Dec. 21: James W.	Burns,	19 Afton Crescent, Paisley Road, W., Glasgow.
	1881, Mar. 22: Thomas	Burt,	60 St. Vincent Crescent, Glasgow.
	1878, Oct. 29: Edward B.	Caird,	777 Commercial Rd., Limehouse, London.
	1878, Dec. 17: James	Caldwell,	130 Elliot Street, Glasgow.
	1890, Feb. 25: Donald	Cameron,	Municipal Offices, Exeter.
	1885, Mar. 24: John B.	Cameron,	160 Hope Street, Glasgow.
	1875, Dec. 21: J. C.	Cameron,	24 Pollok Street, Glasgow.
	1889, Apr. 23: John	Cameron,	London Works, Renfrew.
	1890, Mar. 25: William	Cameron,	1 Airedale Terrace, Wakefield Road, Hunslet, Leeds.
	1890, Jan. 21 : John	Campbell,	Vassili Ostroff, 1st Line, No. 20, St. Petersburg.
	1889, Oct. 22 : Evelyn G.	Carey,	Dalmarnock Iron Works, Bridgeton, Glasgow.
	1868, Dec 23: David	Carmichael,	Ward Foundry, Dundee.
	1881, Nov. 22: John H.	Carruthers,	82 Langside Road, Crosshill, Glasgow.
	1892, Feb. 23: James	Chalk,	66 Bath Street, Glasgow.
	1883, Jan. 23: John	Clark,	British India Steam Navigation Co., 203 West George Street, Glasgow.

Digitized by Google

1891, Oct. 27: Charles	Clarkson,	Francis Morton & Co., Hamilton Iron Works, Garston, near Liverpool.
1884, Feb. 26: James T.	Cochran,	Cochrane & Co., Shipbuilders, Birkenhead.
1890, Mar. 25: John	Cochrane,	Grahamston Foundry, Barrhead.
1881, Oct. 25: George	Cockburn,	Rhodora Villa, St. Andrew's Drive, Pollokshields, Glasgow.
G. 1876, Dec. 19: / M. 1884, Mar. 25: Charles	Connell,	Whiteinch, Glasgow.
G. 1877, Dec. 18: / M. 1885, Nov. 24: James	Conner,	Loco. Dept. Portpatrick & Wigton Joint Railway, Stranraer.
1864, Feb. 17: James	Copeland,	16 Pulteney St., Glasgow.
1864, Jan. 20: William R.	Copland,	146 West Regent Street, Glasgow.
1868, Mar. 11: S. G. G.	Copestake,	Glasgow Locomotive Works, Little Govan, Glasgow.
G. 1880, Dec. 21 / M. 1891, Oct. 27 Sinclair	Couper,	Moore Park Boiler Works, Govan, Glasgow.
1866, Nov. 28: M'Taggart	Cowan,	109 Bath Street, Glasgow,
1861, Dec. 11: William	Cowan,	46 Skene Ter., Aberdeen.
1883, Dec. 18: Samuel	Crawford,	John Scott & Co., Engineers & Shipbuilders, Kinghorn.
1881, Mar. 22: William	Crockatt,	26 Nithsdale Drive, Pollokshields, Glasgow.
G. 1882, Feb. 21: / M. 1889, Oct. 22: W. S.	Cumming,	2 Preston Crescent, Inverkeithing.
1872, Nov. 26: David	Cunningham,	F.R.S.E., Harbour Chambers, Dundee.
1884, Dec. 23: Peter N.	Cunningham,	Easter Kennyhill House, Cumbernauld Road, Glasgow.

Digitized by Google

1869, Jan. 20:	James	Currie,	16 Bernard Street, Leith.
1889, Oct. 22:	David W.	Cuthbert,	101 St. Vincent Street, Glasgow.
1888, Jan. 24:	John	Darling,	34 Queen Square, Glasgow.
G. 1881, Mar. 22: M. 1888, Dec. 18:	David	Davidson,	24 Albert Drive, Crosshill, Glasgow.
G. 1874, Feb. 24: M. 1882, Dec. 19:	James	Davie,	8 Park Terrace, Govan, Glasgow.
1861, Dec. 11:	Thomas	Davison,	248 Bath Street, Glasgow.
1869, Feb. 17:	James	Deas,	Engineer, Clyde Trust, Crown Gardens, Glasgow.
1882, Dec. 19:	J. H. L. Van	Deinse,	34 Binnenkant, Amsterdam.
1883, Nov. 21:	James	Denholm,	5 Derby Terrace, Sandyford Street, Glasgow.
1888, Feb. 21:	Archibald	Denny,	Braehead, Dumbarton.
1887, Oct. 25:	James	Denny,	Engine Works, Dumbarton.
	Peter	*Denny, LL.D., F.R.S.E.,	Helenslee, Dumbarton.
1888, Feb. 21:	Peter	Denny, Jun.,	Bellfield, Dumbarton.
	Member of Council.		
1878, Mar. 19:	Frank W.	Dick,	Palmer's Steel Works, Jarrow-on-Tyne.
1890, Nov. 19:	B. Gillespie	Dickson,	Cromwell Park, Perth.
G. 1873, Dec. 24: M. 1878, Jan. 22:	James S.	Dixon,	97 Bath Street, Glasgow.
1871, Jan. 17:	William	Dobson,	The Chesters, Jesmond, Newcastle-on-Tyne.
1864, Jan. 20:	James	Donald,	Abbey Works, Paisley.
1876, Jan. 25:	James	Donaldson,	Almond Villa, Renfrew.
1886, Nov. 23:	Patrick	Doyle, F.R.S.E.,	19 Lall. Bazar St., Calcutta.
1890, Apr. 29:	Alexander	Drew,	A. & J. Main & Co., Possil Park, Glasgow.

Digitized by Google

1884, Dec. 23: John W.W. Drysdale, 46 Circus Drive, Glasgow.
1882, Oct. 24: Chas. R. Dubs, Glasgow Locomotive Works, Glasgow.
1886, Nov. 23: John Duncan, Ardenclutha, Port-Glasgow.
1881, Jan. 25: Robert Duncan, Whitefield Engine Works, Govan, Glasgow.
1873, Apr. 22: Robert Dundas, (*President.*) 3 Germiston Street, Glasgow.
1869, Nov. 23: David Jno. Dunlop, Inch Works, Port-Glasgow.
1877, Jan. 23: John G. Dunlop, J. & G. Thomson, Clyde, bank, Dumbartonshire.
1880, Mar. 23: Hugh S. Dunn, Earlston Villa, Caprington, Kilmarnock.
1886, Oct. 26: Peter Dunn, 1218 Hyde Street, San-Francisco, U.S.A.
1883, Oct. 23: Henry Dyer, D.Sc., M.A., 8 Highburgh Terrace, Dowanhill, Glasgow.

1876, Oct. 24: Jn. Marshall Easton, Redholm, Helensburgh.
1885, Feb. 24: Francis Elgar, LL.D., F.R.S.E., Fairfield Shipbuilding and Engineering Co., Ltd., 113 Cannon St., London, E.C.

G. 1869, Nov. 23: } John Ferguson, Shipbuilder, Leith.
M. 1878, Mar. 19: }
1889, Oct. 22: Peter Ferguson, Phœnix Works, Paisley.
1874, Feb. 24: Immer Fielden, 2 Thornton Villas, Holderness Road, Hull.
1880, Jan. 27: Alexander Findlay, Parkneuk Iron Works, Motherwell.
G. 1873, Dec. 23: } E. Walton Findlay, Ardeer, Stevenston.
M. 1884, Nov. 25: }
1884, Dec. 23: Finlay Finlayson, Muirend Cottage, Dundyvan, Coatbridge.
1872, Nov. 26: Thomas Forrest, 66 Bath Street, Glasgow

Digitized by Google

1883, Dec. 18: Lawson	Forsyth,	10 Grafton Sq., Glasgow.
1870, Jan. 18: William	Foulis,	Engineer, Corporation Gas Works, City Chambers, Glasgow.
1880, Nov. 2: Samson	Fox,	Leeds Forge, Leeds.
1879, Nov. 25: John	Frazer,	P. Henderson & Co., 15 St. Vincent Place, Glasgow.
1885, Jan. 27: Peter	Fyfe,	1 Montrose St., Glasgow.
1858, Nov. 24: James M. (*Past President; Member of Council, and Honorary Treasurer.*)	Gale,	Engineer, Corporation Water Works, City Chambers, Glasgow.
1887, Oct. 25: Lewis P.	Garrett,	19 Renfield Street, Glasgow.
1888, Mar. 20: Ernest	Gearing,	Saxonhurst, Woolston, Southampton.
1888, Dec. 18: E. W.	Gemmell,	Board of Trade Offices. 7 York Street, Glasgow,
G. 1873, Dec. 23: / M. 1882, Mar. 21: Andrew	Gibb,	30 South Street, Greenwich, London, S.E.
1886, Nov. 23: Paterson	Gifford,	101 St. Vincent Street, Glasgow.
1859, Nov. 23: Archibald	*Gilchrist,	11 Sandyford Place, Glasgow.
G. 1866, Dec. 26: / M. 1878, Oct. 29: James	Gilchrist,	Stobcross Engine Works. FinniestonQuay, Glasgow,
G. 1874, Feb. 24: / M. 1891, Mar. 24: James	Gillespie,	21 Minerva St., Glasgow.
1859, Dec. 21: David C.	Glen,	14 Annfield Place, Dennistoun, Glasgow.
1866, Mar. 28: Gilbert S.	Goodwin,	Alexandra Buildings, James Street, Liverpool.
1864, Feb. 17: James	Goodwin,	Ironfounder, Ardrossan.
1868, Mar. 11: Joseph	Goodfellow,	3 Towerhill Terrace, Springburn, Glasgow.

Digitized by Google

1882, Apr. 25:	H. Garrett	Gourlay,	Dundee Foundry, Dundee.
	Edwin	*Graham,	Osbourne, Graham, & Co., Hylton, Sunderland.
1858, Mar. 12:	George	Graham,	Engineer, Caledonian Railway, Glasgow.
1876, Jan. 25:	Thomas M.	Grant,	11 India Street, Glasgow.
1862, Jan. 8:	James	Gray,	Pathhead Colliery, New Cumnock, Ayrshire.
1881, Dec. 20:	L. John	Groves,	Engineer, Crinan Canal, Ardrishaig.
1872, Feb. 27:	A. A.	Haddin,	131 West Regent Street, Glasgow
1881, Jan. 25:	William	Hall,	Shipbuilder, Aberdeen.
1876, Oct. 24:	David	Halley,	Burmeister & Wain, Copenhagen, Denmark.
G. 1874, Feb. 24: M. 1885, Nov. 24:	Archibald	Hamilton,	New Dock Works, Govan, Glasgow.
G. 1873, Dec. 23: M. 1881, Nov. 22:	David C.	Hamilton,	Clyde Shipping Co., 21 Carlton Place, Glasgow.
G. 1866, Dec. 26: M. 1873, Mar. 18:	James	Hamilton, Jun.,	R. Napier & Sons, Govan.
	John	*Hamilton,	22 Athole Gardens, Glasgow.
G. 1869, Nov. 23: M. 1875, Feb. 23:	J. B.	Hamond,	Sparthfield, Bromley, Kent.
1890, Jan. 21:	Peter	Hampton,	Workman, Clark & Co., Belfast.
G. 1880, Nov. 2: M. 1884, Jan. 22:	Bruce	Harman,	Mossbank Villa, Lenzie.
1878, Mar. 19:	Timothy	Harrington,	57 Gracechurch Street, London, E.C.
G. 1874, Feb. 24: M. 1880, Nov. 23:	C. R.	Harvey,	6 Park Quadrant, Glasgow.
1890, Jan. 21:	James	Harvey,	24 George Sq., Glasgow.
1887, Feb. 22:	John H.	Harvey,	Benclutha, Port-Glasgow.

Digitized by Google

1864, Nov. 23: John Hastie, Kilblain Engine Works, Greenock.

1871, Jan. 17: William Hastie, Kilblain Engine Works, Greenock.

1879, Nov. 25: A. P. †Henderson, 30 Lancefield Quay, Glasgow.

1877, Feb. 20: David *Henderson, Meadowside, Partick, Glasgow.

1888, Dec. 18: J. Bailie Henderson, Govt. Hydraulic Engineer, Brisbane, Queensland.

1873, Jan. 21: John †Henderson, Jun., Meadowside, Partick, Glasgow.

1879, Nov. 25: John L. †Henderson, Meadowside, Partick, Glasgow.

1878, Dec. 17: William Henderson, Meadowside, Partick, Glasgow.

1870, May 31: Richard Henigan, Alma Road, Avenue Place Southampton.

G. 1881, Oct. 25: } Charles G. Hepburn, Consulting Engineer, 169 King
M. 1887, Oct. 25: } Street, Sydney.

1877, Feb. 20: George Herriot, (*Vice-President.*) Board of Trade Offices, 7 York Street, Glasgow.

1890, Oct. 28: W. Scott Herriot, Zeeburg House, West Coast, Demerara.

1888, Dec. 18: Wm. Seymour Hide, Engine Department, West Cowes, Isle of Wight.

Laurence *Hill, 2 Alfred Terrace, Hillhead, Glasgow.

1880, Nov. 2: Charles P. Hogg, 175 Hope Street, Glasgow.

1883, Mar. 20: John Hogg, Victoria Engine Works, Airdrie.

1880, Mar. 23: F. G. Holmes, 109 Bath Street, Glasgow.

1883, Mar. 20: Matthew Holmes, Netherby, Lenzie.

1890, Mar. 25: Colin †Houston, Harbour Engine Works, 60 Portman St., Glasgow.

Digitized by Google

1888, Mar. 20:	Robert	Houston,	13 Craignethan Gardens, Partick, Glasgow.
Original:	James	Howden,	8 Scotland Street, Glasgow.
1891, Dec. 22:	James Howden	Hume,	5 Maxwell Terrace, Pollokshields.
Original:	Edmund	*Hunt,	87 St. Vincent St., Glasgow.
G. 1886, Oct. 26: M. 1889, Nov. 19:	Gilbert M.	Hunter,	Maybole, Ayrshire.
1881, Jan. 25:	James	Hunter,	Aberdeen Iron Works, Aberdeen.
1891, Feb. 24:	Joseph Gilbert	Hunter,	36 Oswald Street, Glasgow.
G. 1873, Dec. 23: M. 1885, Nov. 24:	Guybon	Hutson,	Kelvinhaugh Engine Works, Glasgow.
G. 1873, Dec. 23: M. 1877, Feb. 20:	P. S.	Hyslop,	Upper Cairn, New Cumnock.
1861, May 1:	John	Inglis,	Point House Shipyard, Glasgow.
G. 1883, Jan. 23: M. 1891, Nov. 24:	J. Anthony	Inglis,	10 Kingsborough Gardens, Kelvinside, Glasgow.
1891, Apr. 28:	William	Inglis,	Lochside House, Hamilton.
1890, Feb. 25:	William	Ireland,	7 Ardgowan Terrace, Glasgow.
1889, Jan. 22:	John	Irving,	Avenue End, Cardross.
1879, Jan. 21:	Thos. F.	Irwin,	2A Tower Chambers, Old Churchyard, Liverpool.
1890, Apr. 29:	C. J.	Jackaman,	Dalmarnock Iron Works, Bridgeton, Glasgow.
1891, Mar. 24:	Peter	Jackson,	Consulting Engineer, 67 Hope Street.
1875, Dec. 21:	William	Jackson,	Govan Engine Works, Govan, Glasgow.
1889, Mar. 26:	Prof. Andw. (*Member of Council.*)	Jamieson, F.R.S.E.,	The Glasgow and West of Scotland Technical College, Bath St., Glasgow.

Digitized by Google

1891, Oct. 27:	Andrew	Johnston,	Bank Buildings, Hong Kong.
1879, Feb. 25:	David	Johnston,	Eden Villa, Govan, G'gow.
1883, Jan. 23:	F. C.	Kelson,	AngraBank, WaterlooPark, Waterloo, Liverpool.
1875, Nov. 23:	William	Kemp,	HelenSt. Engineering W'ks, Govan, Glasgow.
1878, Mar. 19:	Hugh	Kennedy,	Redclyffe, Partickhill, Glasgow.
1877, Jan. 23:	John	Kennedy,	R. M'Andrew & Co., Suffolk House, Laurence Pountney Hill, London, E.C.
1891, Dec. 22:	Rankin	Kennedy,	Carntyne Electrical Works, Glasgow.
1876, Feb. 22:	Thomas	Kennedy,	Water Meter Works, Kilmarnock.
1890, Jan. 21:	Alexander	Kidd,	36 Oswald St., Glasgow.
1879, Dec. 23:	John G.	Kinghorn,	Tower Buildings, Water Street, Liverpool.
1885, Nov. 24:	Frank E.	†Kirby,	Detroit, U.S., America.
1864, Oct. 26:	Alex. C.	Kirk, LL.D., (*Past President.*)	19 Athole Gardens, Kelvinside, Glasgow.
Original:	David	*Kirkaldy,	Testing and Experimenting Works, 99 Southwark Street, London, S.E.
1885, Jan. 27:	Charles A.	Knight,	21 Bothwell St., Glasgow.
1880, Mar. 23:	Frederick	Krebs,	c/o L. H. Carl, Copenhagen, Denmark.
1891, Jan. 27:	James A.	Lade,	Glenburn Villa, Port-Glasgow.
1884, Mar. 25:	John (*Member of Council.*)	Laidlaw,	98 Dundas Street, S.S., Glasgow.
1862, Nov. 26:	Robert	Laidlaw,	147 East Milton Street, Glasgow.

Digitized by Google

1880, Mar. 20:	Andrew (*Member of Council.*)	Laing,	1 Broomhill Terrace, East Partick, Glasgow.
1875, Oct. 26:	William	Laing,	17 M'Alpine St., Glasgow.
1880, Feb. 24:	James	Lang,	°/₀ George Smith & Sons, City Line, 45 West Nile Street, Glasgow.
1884, Feb. 26:	John	Lang, Jun.,	Church Street, Johnstone.
1888, Feb. 21:	George B.	Laurence,	Clutha Iron Works, Paisley Road, Glasgow.
1891, Feb. 24:	William	Leslie,	93 Hope Street, Glasgow.
G. 1873, Dec. 23: M. 1876, Oct. 24:	Charles C.	Lindsay,	167 St. Vincent St., Glasgow.
1884, Feb. 26:	John	List,	3 St. John's Park, Blackheath, London, E.
1862, Apr. 2:	H. C.	Lobnitz,	Renfrew.
1889, Dec. 17:	Alfred E.	Lonergan,	Whitefield Engine Works, Govan, Glasgow.
1888, Feb. 21:	Hugh D.	Lusk,	Rosebank, Greenock.
1885, Oct. 27:	John	Lyall,	69 St. Vincent Crescent, Glasgow.
1858, Feb. 17:	David	M'Call,	160 Hope Street, Glasgow.
1874, Mar. 24:	Hector	MacColl,	MacIlwaine & MacColl, Ld., Shipbuilders and Engineers, Belfast.
	Hugh	*MacColl,	Manager, Wear Dock Yard, Sunderland.
G. 1881, Dec. 20: M. 1889, Oct. 22:	Hugo	MacColl,	Fabrica de Portilla, White & Co., Sevilla, Spain.
1883, Oct. 23:	James	M'Creath,	208 St. Vincent Street, Glasgow.
1871, Jan. 17:	David	M'Culloch,	Vulcan Works, Kilmarnock.
1891, Jan. 27:	Frank	M'Culloch,	Shipbuilder, Her Majesty's Indian Marine Dockyard, Bombay.

Digitized by Google

1884, Feb. 26:	James	M'Ewan,	Cyclops Foundry, 50 Peel Street, London Road, Glasgow.
1891, Jan. 27:	Joseph	M'Ewan,	35 Houldsworth Street. Glasgow.
G. 1874, Feb. 24: M. 1885, Nov. 24:	George	M'Farlane,	24 George Square, Glasgow.
1880, Nov. 2:	James W.	Macfarlane,	12 Balmoral Villas, Cathcart, Glasgow.
1886, Oct. 26:	Walter	Macfarlane,	12 Lynedoch Cres., Glasgow.
G. 1886, Dec. 21: M. 1891, Apr. 28:	J. Grant	M'Gregor,	Canadian Pacific Railway Engineering Department, Montreal.
1886, Jan. 26:	Thomas	M'Gregor,	10 Mosesfield Terrace, Springburn, Glasgow.
1887, Nov. 22:	Hugh	M'Intyre,	128 Victoria St., Partick, Glasgow.
1887, Apr. 6:	Edward	Mackay,	8 George Square, Greenock.
1881, Mar. 22:	William A.	Mackie,	3 Broomhill Terrace, Partick, Glasgow.
1888, Apr. 24:	James	M'Kechnie,	Engine Department, Martinez Rivas Palmer, Bilbao, Spain.
1892, Feb. 23:	John F.	MacLaren, B.Sc.,	Eglinton Foundry, Canal Street, Glasgow.
G. 1880, Nov. 2: M. 1885, Dec. 22:	Robert	MacLaren,	Eglinton Foundry, Canal Street, Glasgow.
1891, Apr. 28:	Prof. Alex.	MacLay, B.Sc.,	32 Buckingham Terrace, Glasgow.
	Sir Andw.	*Maclean,	Viewfield House, Partick, Glasgow.
1886, Dec. 21:	William T.	†Maclellan,	Clutha Iron Works, Glasgow.
1890, Feb. 25:	Robert	M'Master,	Linthouse, Glasgow.

Digitized by Google

	William	*MacMillan,	1 Foremount Ter., Partick, Glasgow.
1884, Dec. 23:	John	M'Neil,	Helen St., Govan, Glasgow.
1883, Jan. 23:	James	M'Ritchie,	Singapore.
1891, Mar. 24:	William	M'Whirter,	1 Osbourne Place, Govan.
1875, Dec. 21:	George	Mathewson,	Bothwell Works, Dunfermline.
1884, Apr. 22:	Henry A. (*Member of Council.*)	Mavor,	56 George Sq., Glasgow.
1876, Jan. 25:	William W.	May,	5 Edelweiss Terrace, Partickhill, Glasgow.
1887, Jan. 25:	Henry	Mechan,	17 Fitzroy Place, Glasgow.
1891, Oct. 27:	Samuel	Mechan,	5 Kelvingrove Terrace, Glasgow.
G. 1876, Oct. 24: / M. 1882, Nov. 28:	James	Meldrum,	3 Elmbank Street, Glasgow.
1883, Jan. 23:	William	Melville,	Engineer, Glasgow & South-Western Railway, St. Enoch Square, Glasgow
1881, Mar. 22:	William	Menzies,	7 Dean Street, Newcastle-on-Tyne.
G. 1832, Jan. 24: / M. 1890, Oct. 28:	R. A.	Middleton,	23 Kensington Terrace, Ibrox, Glasgow.
G. 1873, Dec. 23: / M. 1881, Nov. 22:	John F.	Miller,	Greenoakhill, Broomhouse.
Original:	James B.	Mirrlees,	45 Scotland Street, Glasgow.
1886, Jan. 26:	Alexander	Mitchell,	4 Bellevue Terrace, Springburn.
1888, Nov. 20:	Thomas	Mitchell,	West Highland Railway Works, Inverarnan, by Crianlarich.
1876, Mar. 21:	James (*Member of Council.*)	Mollison,	6 Hillside Gardens, Partickhill.
1869, Dec. 21:	John	Montgomerie,	210 Great Northern Ter., Possil Park, Glasgow.

Digitized by Google

1883, Nov. 21: Joseph Moore, 1099 Adeline Street, Oakland, California.

1862, Nov. 26: Ralph Moore, (*Vice-President.*) 13 Clairmont Gardens, Glasgow.

1891, Jan. 27: Robert T. Moore, B.Sc., 13 Clairmont Gardens, Glasgow.

1888, Mar. 20: William Morison, 25 St. Vincent Crescent, Glasgow.

G. 1878, Dec. 17: } Robert Morton, 21 Bothwell St., Glasgow.
M. 1883, Jan. 23: }

1892, Feb. 23: Robert Motion, J. & P. Coats, Paisley.

1885, Mar. 24: Edmund Mott, Board of Trade Surveyor, 7 York Street, Glasgow.

1891, Nov. 24: Montague B. Mountain, 3 Albion Cres., Dowanhill, Glasgow.

1864, Feb. 17: Hugh Muir, 7 Kelvingrove Terrace, Glasgow.

1882, Jan. 24: John G. †Muir, ———

1882, Dec. 19: Robert D. Munro, Engineer, Scottish Boiler Insurance Co., 13 Dundas Street, Glasgow.

Original: James Murdoch, Shipbuilder, Port-Glasgow.

1880, Jan. 27: William Murdoch, 11 Bothwell St, Glasgow.

G. 1878, May 14: } Angus Murray, Strathray, Dumbreck.
M. 1889, Nov. 19: }

1886, Jan. 26: James Murray, 94 Washington St., G'gow.

1892, Feb. 23: Robert Murray, 28 Waterhouse Lane, Hull.

1891, Dec. 22: Thomas Blackwood Murray, B.Sc., Heavyside, Biggar.

1881, Jan. 25: Henry M. Napier, Shipbuilder, Yoker, near Glasgow.

1857, Dec. 23: John †*Napier, C. Audley Mansions, Grosvenor Square, London.

1881, Dec. 20: Robert T. †Napier, Shipbuilder, Yoker, near Glasgow.

Digitized by Google

1891, Oct. 27: Walter	Neilson,	Clydebridge Steel Works, Cambuslang.
1869, Nov. 23: Theod. L.	Neish,	14 Belmont Crescent, Hillhead, Glasgow.
1883, Dec. 18: Thomas	Nicol,	6 Rosevale Terrace, Partick, Glasgow.
1884, Dec. 23: Wm. H.	Nisbet,	c/o Dr Hood, 291 Elizabeth Street, Sydney, N.S.W.
1887, Apr. 6: William	Nish,	Anchor Line Offices, 7 Bowling Green, New York.
1876, Dec. 19: Richard	Niven,	Airlie, Ayr.
1861, Dec. 11: John	Norman,	131A St. Vincent Street, Glasgow.
1891, Jan. 27: William	O'Brien,	21 Ibrox Terrace, Govan, Glasgow.
1882, Jan. 24: Robert S.	Oliver,	Highland Railway Co., Inverness.
1860, Nov. 28: John W.	Ormiston,	Douglas Gardens, Uddingston.
1885, Mar. 24: Alex. T.	Orr,	Fletcher & Co., Tilbury Docks, Essex.
1890, Oct. 28: Heinrich	Paasch,	27 Rue d'Amsterdam, Antwerp.
1883, Nov. 21: W. L. C.	Paterson,	19 St. Vincent Crescent, Glasgow.
1887, Nov. 22: Prof. George	Paton,	Royal Agricultural College, Cirencester.
1889, Feb. 26: John	Paton,	74 Forth Street, Pollokshields, Glasgow.
1877, Apr. 24: Andrew	Paul,	Levenford Works, Dumbarton.

Digitized by Google

G. 1884, Feb. 26: M. 1886, Dec. 21:	Matthew	Paul, Jun.,	Levenford Works, Dumbarton.
1880, Nov. 2:	James M.	Pearson,	John Dickie St., Kilmarnock.
G. 1873, Dec. 23: M. 1888, Oct. 23:	Edward C.	Peck,	Yarrow & Co., Poplar, London.
G. 1881, Oct. 25: M. 1891, Oct. 27:	Wm. T.	Philp,	Workman, Clark & Co., Belfast.
1887, Oct. 25:	Robt. Band	Pope,	Leven Shipyard, Dumbarton.
1887, Apr. 6:	Theodor J.	Poretchkin,	Russian Imperial Navy, c/o William Clark & Co., 45 Hope Street, Glasgow.
1877, Nov. 20:	F. P.	Purvis,	Don Villa, Greenock.
1868, Dec. 23:	Henry M.	Rait,	155 Fenchurch Street, London.
1873, Apr. 22:	Richard	Ramage,	Shipbuilder, Leith.
1872, Oct. 22:	David	Rankine,	75 West Nile St., Glasgow.
1886, Mar. 23:	John F.	Rankin,	Eagle Foundry, Greenock.
1881, Jan. 25:	Charles	Reid,	Lilymount, Kilmarnock.
1883, Nov. 21:	George W.	Reid,	Highland Railway, Inverness.
1868, Mar. 11:	James (*Past President.*)	Reid,	Locomotive Works, Springburn, Glasgow.
1869, Mar. 17:	James	Reid,	Shipbuilder, Port-Glasgow.
1891, Nov. 24:	James B.	†Reid,	Chapelhill, Paisley.
1880, Apr. 27:	John	Rennie,	Ardrossan.
G. 1873, Dec. 23: M. 1881, Nov. 22:	Charles H.	Reynolds,	Sir W. G. Armstrong, Mitchell & Co., Walker Shipyard, Newcastle-on-Tyne.
1886, Apr. 27:	James (*Member of Council.*)	Riley,	Steel Company of Scotland, 23 Royal Exchange Sq., Glasgow.
1890, Mar. 25:	James W.	Robb,	133 Meadow Park Street, Dennistoun, Glasgow.

Digitized by Google

1876, Oct. 24:	Duncan	Robertson,	Baldroma, Ibrox, Glasgow.
1884, Apr. 22:	R. A.	Robertson,	8 Park St. East, Glasgow.
1863, Nov. 25:	William	Robertson,	123 St. Vincent Street, Glasgow.
1888, Apr. 24:	J. F.	Robinson,	Atlas Works, Springburn, Glasgow.
Original:	Hazltn. R.	*Robson, (*Past President.*)	14 Royal Cresct., Glasgow.
1877, Feb. 20:	Jno. MacDonald	Ross,	2 Devonshire Gardens, Kelvinside, Glasgow.
G. 1882, Nov. 28: / M. 1891, Oct. 27:	J. MacEwan	Ross,	Ardenlea, Lenzie.
1861, Dec. 11:	Richard G.	Ross,	21 Greenhead St., Glasgow.
1892, Jan. 26:	Fred. John	Rowan,	121 West Regent Street, Glasgow.
Original:	David	*Rowan, (*Past President.*)	231 Elliot Street, Glasgow.
G. 1875, Dec. 21: / M. 1885, Jan. 27:	James	Rowan,	231 Elliot Street, Glasgow.
1888, Dec. 18:	Thomas	Rowley,	Board of Trade Offices, 7 York Street, Glasgow.
G. 1858, Dec. 22: / M. 1863, Mar. 4:	George	Russell, (*Member of Council.*)	Engineer, Motherwell.
1881, Feb. 22:	Joseph	Russell,	Shipbuilder, Port-Glasgow.
1890, Jan. 21:	Edward Mowbray	Salmon,	342 Argyle St., Glasgow.
1876, Oct. 24:	Peter	Samson,	Board of Trade Offices, Bedford St., Covent Garden, London, W.C.
1885, Feb. 24:	James	Samuel, Jun.,	185 Kent Road, Glasgow.
1883, Feb. 20:	John	Sanderson,	Lloyds' Registry, 36 Oswald Street, Glasgow.
1882, Dec. 19:	Prof. Jas.	Scorgie,	King's Gate, Aberdeen.
G. 1879, Mar. 25: / M. 1888, Oct. 23:	John	†Scobie,	c/o Senores Read & Campbell, Railway Contractors, 25 Apartado, Puebla, Mexico.

Digitized by Google

1872, Jan. 30:	James E.	Scott,	52 Coal Exchange, London.
1881, Jan. 25:	John	Scott,	Whitebank Engine Works, Kirkcaldy.
1860, Nov. 28:	Thos. B.	*Seath,	42 Broomielaw, Glasgow.
1875, Jan. 26:	Alexander	Shanks,	Belgrade, Aytoun Road, Pollokshields, Glasgow.
1892, Apr. 26:	Alexander	Shanks, Jun.,	43 Aytoun Road, Pollokshields.
1889, Mar. 26:	John W.	Shepherd,	Penarva, Partickhill, Glasgow.
1858, Nov. 24:	William	Simons,	Tighnabruaich, Argyleshire.
1862, Jan. 22:	Alexander	Simpson,	175 Hope Street, Glasgow.
1887, Jan. 25:	Robert	Simpson, B.Sc.,	175 Hope St., Glasgow.
G. 1877, Mar. 20: M. 1887, Dec. 20:	Nisbet	Sinclair,	3 Strathallan Terrace, Partick, Glasgow.
G. 1884, Mar. 25: M. 1891, Mar. 24:	Russell	Sinclair,	Consulting Engineer, 81 Pitt St., Sydney, N.S.W.
G. 1882, Nov. 28: M. 1889, Oct. 22:	Geo. H.	Slight, Jun.,	Northern Lighthouse Board, 84 George St., Edinburgh.
1880, Nov. 2:	Alexander D.	Smith,	5 Belmar Terrace, Shields Road, Pollokshields, Glasgow.
1871, Dec. 11:	Hugh	Smith,	9 Kelvinside Terrace, N., Glasgow.
1888, Oct. 23:	James	Smith,	Waterloo Estates, Trinidad, West Indies.
1870, Feb. 22:	Edward	Snowball,	Engineer, Hyde Park Locomotive Works, Springburn, Glasgow.
1887, Jan. 25:	Peter A.	Somervail,	Dalmuir Ironworks, Dalmuir.
1891, Nov. 24:	A.	Spence,	Shipbuilder, Grangemouth.
1883, Dec. 18:	Alex. E.	†Stephen,	17 Woodside Pl., Glasgow.
	John	†*Stephen,	Linthouse, Govan, Glasgow.

Digitized by Google

1890, Feb. 25: Andrew Stewart, 41 Oswald St., Glasgow.
1867, Jan. 30: Duncan Stewart, 47 Summer Street, Glasgow.
1890, Mar. 25: James †Stewart, Harbour Engine Works, 60 Portman Street, Glasgow.
1892, Mar. 22: John Graham Stewart, B.Sc., 17 Park Ter., Glasgow.
1874, Oct. 27: Peter Stewart, 53 Renfield Street, Glasgow.
G. 1873, Dec. 23: / M. 1882, Oct. 24: W. B. Stewart, 18 Newton Place, Glasgow.
Original: Patrick Stirling, The Great Northern Railway, Doncaster.
1891, Mar. 24: James Strong, Granville Buildings, Polokshields, Glasgow.
1889, Oct. 22: James Stuart, 16 Robertson St., Glasgow.
1877, Jan. 23: James Syme, 8 Glenavon Ter., Partick, Glasgow.

1879, Oct. 28: James Tait, Wishaw.
1885, Apr. 28: Peter Taylor, Dock Shipbuilding Yard, Port-Glasgow.
1879, Mar. 25: Staveley Taylor, Russell & Co., Shipbuilders, Greenock.
1873, Dec. 23: E. L. Tessier, Veritas Office, 29 Waterloo Street, Glasgow.
1885, Jan. 27: George W. Thode, 21 Bothwell St., Glasgow.
1889, Feb. 26: John Thom, 109 Hope Street, Glasgow.
1887, Apr. 26: Prof. Arthur W. Thomson, D.Sc., College of Science, Poona, India.
1882, Apr. 25: Geo. P. Thomson, Clydebank, Dumbartonshire.
1883, Dec. 18: George Thomson, 9 Buckingham Ter., Partick, Glasgow.
G. 1874, Feb. 24: / M. 1889, Oct. 22: George C. Thomson, 23 Kersland Terrace, Hillhead, Glasgow.
1886, Mar. 23: James Thomson, Jun., M.A., Ordnance Works, Elswick, Newcastle-on-Tyne.

Digitized by Google

1868, Feb. 12:	James M.	Thomson,	36 Finnieston St., Glasgow.
1882, Mar. 21:	James R.	Thomson,	Clydebank, Dumbartonshire.
1868, May 20:	John	Thomson,	36 Finnieston St., Glasgow.
1875, Jan. 26:	Robert S.	Thomson,	3 Melrose Street, Queen's Crescent, Glasgow.
1864, Feb. 17:	W. R. M.	Thomson,	96 Buchanan Street, Glasgow.
1878, May 14:	W. B.	Thompson,	Ellengowan, Dundee.
1874, Oct. 27:	Prof. R. H.	Thurston,	Sibley College, Cornell University, Ithaca, N.Y., U.S.A.
1876, Nov. 21:	Alexander	Turnbull,	St. Mungo's Works, Bishopbriggs, Glasgow.
1875, Nov. 23:	John	Turnbull, Jun.,	Consulting Engineer, 18 Blythswood Sq., Glasgow.
1880, Apr. 27:	John	Tweedy,	Neptune Works, Newcastle-on-Tyne.
1892, Jan. 26:	John	Wallace,	12 Kelvingrove Street, Glasgow.
1883, Jan. 23:	Peter	Wallace,	Ailsa Shipbuilding Co., Troon.
1885, Mar. 24:	W. Carlile	Wallace,	Castle Shipyard, Port-Glasgow.
1886, Jan. 26:	John	Ward, (*Member of Council.*)	Leven Shipyard, Dumbarton.
1875, Mar. 23:	G. L.	Watson,	108 W. Regent St., Glasgow.
1864, Mar. 16:	Sir W. Renny	Watson,	16 Woodlands Ter., Glasgow.
G. 1875, Dec. 21: / M. 1886, Oct. 26:	R. G.	Webb,	Richardson & Cruddas, Byculla, Bombay.
G. 1878, Dec. 17: / M. 1887, Nov. 22:	Robert L.	Weighton, M.A.,	17 Hawthorn Road, Gosforth, Newcastle-on-Tyne.
1874, Dec. 22:	George	Weir,	18 Millbrae Cres., Langside, Glasgow.

Digitized by Google

1874, Dec. 22: James	Weir,	Silver Bank, Cambuslang, near Glasgow.
G. 1876, Dec. 19: M. 1884, Feb. 26:	Thomas D. Weir,	F.C., Central de Venezuela, Caracas, Venezuela, South America.
1889, Apr. 23: Thomas	†Weir,	China Merchants' Steam Navigation Co., Marine Superintendent's Office, Shanghai, China.
1869, Feb. 17: Thomas M.	Welsh,	3 Princes Gardens, Dowanhill, Glasgow.
1868, Dec. 23: Henry H.	West,	14 Castle Street, Liverpool.
1883, Feb. 20: Richard S.	White,	Fairfield Works, Govan, Glasgow.
1888, Mar. 20: George	Whitehall,	c/o Walsh, Lovett, & Co., Bombay.
1887, Apr. 6: James	Whitehead,	6 Buchanan Ter., Paisley.
G. 1877, Jan. 23: M. 1890, Oct. 28:	Robt. John Wight,	Westbourne House, Union Street, Aberdeen.
1884, Nov. 25: John	Wildridge,	Consulting Engineer, Sydney, N.S.W., Australia.
1876, Oct. 24: Francis W.	Willcox,	45 West Sunniside, Sunderland.
1884, Dec. 23: James	Williamson,	Director H.M. Dockyards, Whitehall, London.
1883, Feb. 20: Robert	Williamson,	Lang & Williamson, Engineers, &c., Newport, Mon.
1890, Dec. 23: Robert	Williamson,	7 Keir Street, Pollokshields, Glasgow.
Alex. H.	*Wilson,	Aberdeen Iron Works, Aberdeen.
1887, Oct. 25: David	Wilson,	Arecibo, Porto Rico, West Indies.
1889, Oct. 22: Gavin	Wilson,	16 Robertson St., Gl'gow.
1868, Dec. 23: James	Wilson,	Water Works, Greenock.

Digitized by Google

1870, Feb. 22:	John	Wilson,	165 Onslow Drive, Dennistoun, Glasgow.
G. 1883, Jan. 29: M. 1891, Feb. 24:	John	Wilson,	29 Waterloo St., Glasgow,
1853, Jan. 20:	Thomas	†Wingate,	Viewfield, Partick, G'gow.
1888, Nov, 20:	John	Wotherspoon,	———
1891, Feb. 24:	Thos. Wm.	Wray,	Victoria Place, Knottingley, Yorkshire.
1890, Mar. 25:	William G.	Wrench,	5 Oswald St., Glasgow.
1867, Nov. 27:	John	Young,	Galbraith Street, Stobcross, Glasgow.
1891, Dec. 22:	John	Younger,	Overbridge, Ibrox, Glasgow.

Digitized by Google

ASSOCIATES.

Thomas	*Aitken,	8 Commercial Street, Leith.
1888, Nov. 20: Capt. John	Bain,	4 Edelweiss Ter., Partick, Glasgow.
1883, Oct. 28: John	Barr,	Secretary, Glenfield Co., Kilmarnock.
1882, Dec. 19: William	Begg,	Gartfern, High Crosshill, Rutherglen.
1884, Dec. 23: W. S. C.	Blackley,	10 Hamilton Crescent, Partick, Glasgow.
1876, Jan. 25: John	Brown, B.Sc.,	11 Somerset Place, Glasgow.
1865, Jan. 18: John	Bryce,	Sweethope Cottage, N. Milton Road, Dunoon.
1880, Dec. 21: John	Cassells,	Hazel Bank, 62 Glencairn Drive, Pollokshields, Glasgow.
1885, Feb. 24: Robert	Darling,	Bankhead, Laverockbank Road, Trinity, N.B.
1859, Nov. 23: Sir A. Orr	Ewing, Bart., M.P.,	2 W. Regent Street, Glasgow.
1863, Mar. 18: Robert	Gardner,	136 George Street, G'gow.
1891, Oct. 27: James	Galloway, Jun.,	Whitefield Works, Govan.
1860, Jan. 18: George T.	Hendry,	79 Gt. Clyde St., Glasgow.

Names marked thus * were Associates of Scottish Shipbuilders' Association at incorporation with Institution, 1865.

Digitized by Google

1882, Oct. 24:	Wm. A.	Kinghorn,	81 St. Vincent Street, Glasgow.
1884, Feb. 26:	C. R. L.	Lemkes,	194 Hope Street, Glasgow.
1886, Jan. 26:	Capt. Dun.	M'Pherson,	3 Cecil Street, Paisley Rd., W., Glasgow.
1874, Mar. 24:	James B.	Mercer,	Broughton Copper Works, Manchester.
1865, Dec. 20:	John	Morgan,	Springfield House, Bishopbriggs, Glasgow.
1883. Dec. 18:	W. M'Ivor	Morison,	Mayfield, Marine Place, Rothesay.
	James S.	*Napier,	33 Oswald Street, Glasgow.
1869, Nov. 23:	Capt. John	Rankine,	137 St. Andrew's Rd., East Pollokshields, Glasgow.
1867, Dec. 11:	William H.	Richardson,	19 Kyle Street, Glasgow.
1889, Jan. 22:	William	Rigg,	3 Grantly Place, Shawlands, Glasgow.
1888, Jan. 24:	Samuel	Smillie,	71 Lancefield St., Glasgow.
1876, Jan. 25:	George	Smith,	45 West Nile St., Glasgow.
	John	*Smith,	Aberdeen Steam Navigation Co., Aberdeen.
	H. J.	*Watson,	5 Oswald Street, Glasgow.
1882, Dec. 19:	John D.	Young,	Scottish Boiler Insurance Co., 13 Dundas Street, Glasgow.
	William	*Young,	Galbraith Street, Stobcross, Glasgow.
1892, Jan. 26:	Alex.	Young,	53 Waterloo St., Glasgow.

Digitized by Google

GRADUATES.

1890, Mar. 25: J. Millen Adam,	Ibrox Works, Whitefield Road, Govan, Glasgow.
1882, Nov. 28: William H. Agnew,	Engine Drawing Office, Naval Construction and Armament Co., Barrow-in-Furness.
1888, Jan. 24: H. Wallace Aitken,	Netherlea, Pollokshields, Glasgow.
1885, Dec. 22: John Henry Alexander,	42 Sardinia Terrace, Hillhead, Glasgow.
1888, Jan. 24: James Allan,	144 Buccleuch St., Glasgow.
1889, Dec. 17: John Anderson,	2 Holmhead Place, New Cathcart.
1888, Oct. 23: Donald S. Arbuthnot,	c/o Charles Brand & Son, 172 Buchanan Street, Glasgow.
1890, Dec. 23: Arthur S. D. Arundel,	6 West Bank Terrace, Glasgow.
1892, Jan. 26: Peter Bain,	54 Glasgow Road, Dumbarton.
1888, Apr. 24: Harry D. D. Barman,	2 Gilmour Street, Byres Road, Glasgow.
1885, Dec. 22: Peter M'L. Baxter,	c/o Cox & Co., Engineers, &c., Falmouth.
1887, Apr. 26: Thomas Bell,	35 Kersland Terrace, Hillhead, Glasgow.
1889, Nov. 19: W. Napier Bell,	19 Eaton Place, Hillhead, Glasgow.
1885, Mar. 24: Alexander Bishop,	3 Germiston Street, Glasgow.
1885, Oct. 27: Archibald Blair,	12 Arthur Street, Glasgow.

Digitized by Google

1891, Oct. 27: Archibald	Blair, Jun.,	7 Corunna Street, Glasgow.
1892, Mar. 22: Frank R.	Blair,	232 Renfrew St., Glasgow.
1884, Jan. 22: George	Blair, Jun.,	6 Alfred Terrace, Hillhead, Glasgow.
1885, Oct. 27: William C.	Borrowman,	53 Bentinck St., Glasgow.
1891, Dec. 22: W. D.	Bowman,	102 Hill Street, Garnethill, Glasgow.
1888, Jan. 24: Mark	Brand, B.Sc.,	Barrhill Cottage, Twechar, Kilsyth.
1883, Dec. 18: Eben. H.	Brown,	15 Moor Ter., Hartlepool.
1888, Mar. 20: James	Brown,	Simpson & Wilson, C.E., 175 Hope St., Glasgow.
1881, Jan. 25: Matthew T.	Brown, B.Sc.,	194 St. Vincent Street, Glasgow.
1892, Feb. 23: Robert H.	Brown,	5 Woodville Place, Govan.
1891, Jan. 27: Walter G.	Buchanan,	14 Royal Terrace, West, Glasgow.
1891, Feb. 24: Bertram W.	Burnside,	11 Cowlairs Road, Springburn.
1890, Feb. 25: John	Buttery,	c/o Mrs Swan, 26 Granville Street, Glasgow.
1890, Jan. 21: William	Caird,	23 Glasgow Street, Hillhead, Glasgow.
1891, Feb. 24: John	Calder,	1 Iona Place, Mount Florida, Glasgow.
1891, Jan. 27: Hugh	Caldwell,	The Braes, by Kilbarchan.
1888, Jan. 24: Angus	Campbell,	———
1890, Dec. 23: Wm. H.	Carslaw,	400 Great Western Road, Glasgow.
1890, Oct. 28: Robert D.	Casells,	62 Glencairn Drive, Pollokshields, Glasgow.
1884, Feb. 26: John	Cleland, B.Sc.,	Woodhead Cottage, Old Monkland.
1891, Oct. 27: James	Cochrane,	9 Rosehall Street, Glasgow

Digitized by Google

1884, Feb. 26: Alexander	Conner,	9 Scott Street, Glasgow.
1885, Dec. 22: Benjamin	Conner,	9 Scott Street, Glasgow.
1885, Oct. 27: Francis	Coutts,	25 Roslin Ter., Aberdeen.
1892, Feb. 23: George H.	Cox,	J. & G. Thomson, Clydebank.
1890, Oct. 28: John G.	Crookston,	10 University Gardens Terrace, Glasgow.
1886, Mar. 23: Thomas	Danks,	Local Board Offices, Pentre Rhondda, Pontypridd, Wales.
1888, Dec. 18: Harry L.	Davies,	The Vicarage, Kirkby-Lonsdale, England.
1891, Feb. 24: Henry	Deanesly,	38 BerkeleyStreet,Glasgow.
1891, Dec. 22: Kristian S.	Dekke,	Bergen, Norway.
1883, Dec. 18: William	Denholm,	3 Downie Place, Crow Road, Partick, Glasgow.
1883, Feb. 10: Lewis M. T.	Deveria,	c/o P. M'Intosh & Son, 129 Stockwell Street, Glasgow.
1886, Nov. 23: Thomas B.	Dick,	Post Office, Vallejo, California, U.S.A.
1888, Mar. 20: B. B.	Donald,	9 Balgray Ter., Springburn, Glasgow.
1891, Feb. 24: Patrick D.	Donald, B.Sc.,	Annandale, Kilmarnock.
1891, Feb. 24: John	Dougan,	31 Annette Street, Govanhill, Glasgow.
1886, Nov. 23: George F.	Duncan,	Ardenclutha, Port-Glasgow.
1884, Jan. 22: William	Dunlop,	31 Hartington Street, Barrow-in-Furness.
1885, Mar. 24: Robert	Elliot, B.Sc.,	29 Gibson Street, Hillhead, Glasgow.
1878, Jan. 22: James R.	Faill,	7 Winton Drive, Kelvinside, Glasgow.

Digitized by Google

1880, Dec. 21: Henry M.	Fellows,	76 Southtown Road, Great Yarmouth.
1888, Dec. 18: John	Ferguson,	Formans & M'Call, 160 Hope Street, Glasgow.
1881, Feb. 22: William	Ferguson,	Larkfield, Partick, Glasgow.
1885, Jan. 27: Wm. D.	Ferguson,	Albert Villa, Ravenhill Rd., Belfast.
1891, Dec. 22: W. L.	Ferguson,	2 Ardgowan Terrace, Glasgow.
1891, Dec. 22: Alexander	Fergus,	7 Ibrox Place, Glasgow.
1881, Nov. 22: Charles J.	Findlay,	10 Bruce Street, Hillhead, Glasgow.
1883, Oct. 23: Duncan	Finlayson,	196 North Street, Glasgow.
1869, Oct. 26: F. P.	Fletcher,	46 Buccleuch St., Glasgow.
1886, Apr. 27: John I.	Fraser,	Engineering Dept, Harland & Wolff, Belfast.
1892, Feb. 23: Norman O.	Fulton,	Woodbank, Mount Vernon.
1889, Apr. 23: Hugh	Gardner,	c/o R. T. Moore, 160 Hope Street, Glasgow.
1884, Dec. 23: D. C.	Glen, Jun.,	Ingleston Foundry, Greenock.
1885, Jan. 27: Alex. M.	Gordon,	10 Ibrox Place, Ibrox, Glasgow.
1891, Oct. 27: James	Gourlay,	11 Crown Gardens, Dowanhill, Glasgow.
1890, Mar. 25: James E.	Govan,	182 Bath Street, Glasgow.
1882, Jan. 24: Arthur B.	Gowan,	Wootten Villa, Abbey Rd., Barrow-in-Furness.
1884, Feb. 26: Alexander	Gracie,	Willowbank, Yoker.
1889, Feb. 26: J. E.	Harrison,	21 Westminster Ter., G'gow.
1883, Feb. 20: David	Henderson,	Cardross Bank Villa, Cardross.

Digitized by Google

1890, Dec. 23: Wm. G.	Henderson,	1 Radnor Terrace, Glasgow.
1892, Jan. 26: Wm. M'L.	Homan,	6 Buckingham Buildings, Glasgow.
1884, Dec. 23: John	Howarth,	37 Bentinck St., Glasgow.
1891, Dec. 22: George	Howson,	7 Park Ter., Govan, Glasgow.
1885, Feb. 24: John	Inglis,	Bonnington Brae, Edinburgh.
1891, Mar. 24: Harold D.	Jackson,	105 Byars Road, Partick, Glasgow.
1886, Nov. 23: Daniel	Kemp,	5 Rosehall Street, Glasgow.
1883, Feb. 20: Eben. D.	Kemp,	25 Grove Road, Rockferry, Birkenhead.
1890, Oct. 28: John	Kemp,	1 Ibrox Place, Govan, Glasgow.
1890, Oct. 28: Robert G.	Kemp,	1 Ibrox Place, Govan, Glasgow.
1886, Dec. 21: Donald	King,	Engine Department, Martinez Rivas-Palmer, Astilleros del Nervion, Bilbao, Spain.
1891, Oct. 27: James	King,	110 Hill Street, Garnethill, Glasgow.
1886, Jan. 26: John	King,	8 Hamilton Street, Partick, Glasgow.
1888, Apr. 24: R. E.	Kinghorn,	12 Bute Gardens, Hillhead, Glasgow.
1890, Oct 28: John	Kirkwood,	Formans & M'Call, 160 Hope Street.
1888, Nov. 20: Charles	Lang,	25 Kilmailing Terrace, Cathcart, Glasgow.
1887, Oct. 25: Robert	Lawrie,	3 Doune Quadrant, Kelvinside, Glasgow.

Digitized by Google

1886, Jan. 26: John	Lee,	11 Liftin Place, Leeds.
1886, Dec. 21: Robert	Lee, Jun.,	Thornwood, Stepps, near Glasgow.
1891, Dec. 22: Wm. Orr	Leitch, Jun.,	3 Germiston Street, Glasgow.
1883, Nov. 21: William R.	Lester,	2 Doune Terrace, North Woodside, Glasgow.
1885, Mar. 24: Fred.	Lobnitz,	Clarence House, Renfrew.
1880, Nov. 2: Patrick F.	Maccallum,	Fairbank Cottage, Helensburgh.
1883, Dec. 18: Peter	M'Coll,	Stewartville Place, Partick, Glasgow.
1883, Dec. 18: John	Macdonald,	6 Rupert Street, Glasgow.
1891, Oct. 27: Henry	MacEwen,	5 Cathkin Terrace, Mount Florida.
1882, Oct. 24: James L.	Macfarlane,	Meadowbank, Torrance.
1887, Jan. 25: David L.	M'Geachen,	13 Carmichael St., Govan, Glasgow.
1883, Dec. 18: John Bow	M'Gregor,	5 Muir Street, Renfrew.
1882, Dec. 19: Allan	M'Keand,	3 Doune Place, Kelvinside, Glasgow.
1881, Oct. 25: James	Mackenzie,	c/o D. Rollo & Sons, 10 Fulton Street, Liverpool.
1883, Jan. 23: Thos. B.	Mackenzie,	342 Duke Street, Glasgow.
1890, Oct. 28: Norman	M'Kinnel,	Dumfries Iron Works, Dumfries.
1883, Feb. 26: Robert	M'Kinnell,	56 Dundas Street, S.S., Glasgow.
1891, Feb. 24: Wm.	M'Lagan,	11 Pitt Street, Glasgow.
1882, Dec. 19: Peter	M'Lean,	Waverley Ironworks, Galashiels.
1885, Jan. 27: John	M'Millan,	26 Ashton Ter., Glasgow.
1886, Dec. 21: Andrew	M'Vitae,	7 Alexander St., Glasgow.
1886, Dec. 21: James	Mack,	3 Germiston St., Glasgow

Digitized by Google

1887, Feb. 22: Cree	Maitland,	Manager, Sunger Ujong Railway, Port Dickson, Malay Peninsula.
1885, Oct. 27: John M.	Malloch,	Clarendon Villa, Downfield, Dundee.
1889, Jan. 22: George	Menzies,	26 Minerva Street, Gl'gow.
1889, Jan. 22: Robert	Menzies,	26 Minerva Street, Gl'gow.
1889, Apr. 23: John	Miller,	7 Park Drive South, Whiteinch, Glasgow.
1880, Feb. 24: Robert	Miller,	13 Park Grove Terrace, W., Glasgow.
1890, Feb. 25: Robert F.	Miller,	10 Windsor Terrace, West, Glasgow.
1889, Feb. 26: Sidney	Millar,	375 Eglinton St., Glasgow.
1884, Nov. 25: Thomas	Millar,	Sir W. G. Armstrong, Mitchell, & Co., Ld., Walker Shipyard, Newcastle-on-Tyne.
1883, Dec. 18: Charles W.	Milne,	5 Park Terrace, Langlands Road, Govan, Glasgow.
1881, Jan. 25: Ernest W.	Moir.	c/o S. Pearson & Son, 10 Victoria Street, Westminster, London.
1882, Feb. 21: C. J.	Morch,	Horten, Norway.
1889, Dec. 17: Arthur M.	Morrison,	Laurel Bank, Partick, Glasgow.
1892, Jan. 26: James H.	Muir,	19 Westmuir Street, Parkhead, Glasgow.
1891, Apr. 28: Wm.	Muirhead,	Cloberhill, Maryhill, Glasgow.
1887, Dec. 20: David	Myles,	Sunderland Engine Works, Sunderland.
1892, Jan. 26: John S.	Napier,	6 Windsor Cir., Kelvinside, Glasgow.

Digitized by Google

1890, Apr. 29: Joseph	Nayler,	Bertini Cottage, Newton.
1886, Jan. 26: Thomas	Nicholson,	6 Annfield Place, Glasgow.
1891, Dec. 22: Hugh	Osborne,	30 Rose Street, Garnethill, Glasgow.
1891, Dec. 22: Marshall	Osborne,	35 Burnbank Gardens, Glasgow.
1890, Feb. 25: E. Steven	Paterson,	Glassford Manse, Strathaven.
1888, Jan. 24: James V.	Paterson,	187 Bath Street, Glasgow.
1879, Nov. 25: Alex. R.	Paton,	Lloyds' Register of Shipping, Dock Office Buildings, West Hartlepool.
1886, Jan. 26: Samuel	Paxton,	5 Lorne Terrace, Pollokshields, Glasgow.
1887, Nov. 22: James	Peacock,	5 Wilton Gardens, Glasgow.
1891, Jan. 27: Gilbert F.	Pollock,	1 Barr Street (East), London Road, Glasgow.
1887, Apr. 6: John C.	Preston,	Assistant Engineer, Brisbane Board of Water Works, Brisbane, Queensland.
1885, Jan. 27: James L.	Proudfoot,	Lanemark, New Cumnock.
1880, Nov. 2: Matthew	Rankine,	Rankine & Demas, Fassonla Iron Works, Smyrna.
1886, Dec. 21: Andrew T.	Reid,	10 Woodside Terrace, Glasgow.
1887, Oct. 25: David H.	Reid,	Burnside House, London Road, Kilmarnock.
1884, Dec. 23: James G.	Reid,	Renfield House, Renfrew.
1886, Dec. 21: John	Reid,	10 Woodside Ter., Glasgow.
1884, Feb. 26: Walter	Reid,	118 Ingleby Drive, Glasgow.
1886, Oct. 26: Alexander	Robertson,	41 Darnley Street, Pollokshields, Glasgow.

Digitized by Google

1890, Oct. 28: Edward F.	Robertson,	11 Paton Street, Galashiels.
1887, Dec. 20: Matthew	Robin,	Castle Hill, Hamilton.
1891, Nov. 24: James	Russell,	Belmont, Uddingston.
1891, Dec. 22: James	Russell,	16 Rocklea Ter., Hillhead.
1888, Feb. 21: Leslie S.	Robinson,	29 Rue de la Cote, Havre, France.
1892, Apr. 26: Walter	Robb,	Westfield Road, Horbury, Yorkshire.
1888, Jan. 24: John A.	Rudd,	128 Hope Street, Glasgow.
1887, Apr. 6: Joseph W.	Russell,	The Knowe, Greenock.
1885, Oct. 27: Alexander	Scobie,	Culdees, Partickhill, Glasgow.
1886, Mar. 23: Thomas R.	Seath,	Sunny Oaks, Langbank.
1886, Mar. 23: William Y.	Seath,	Sunny Oaks, Langbank.
1880, Apr. 27: Archibald	Sharp,	2 Ravenscroft Road, Acton Green, London, W.
1882, Oct. 24: John	Sharp,	147 East Milton St., Glasgow.
1890, Mar. 25: John M'F.	Sloan,	5 Somerset Place, Glasgow.
1891, Nov. 24: Alex.	Smith,	5 Matilda Terrace, Strathbungo, Glasgow.
1891, Dec. 22: James	Stark,	3 Germiston Street, Glasgow.
1892, Jan. 26: James	Steel,	239 St. Vincent St., Glasgow.
1881, Nov. 22: John A.	Steven,	12 Royal Crescent, Glasgow.
1891, Dec. 22: Clement H.	Stevens,	42 Leslie Street, Pollokshields, Glasgow.
1881, Jan. 25: William	Stevenson,	6 West View, Wallsend-on-Tyne.
1875, Dec. 21: Andrew	Stirling,	Denny & Co., Engine Works, Dumbarton.

Digitized by Google

1888, Jan. 24: Archd.	Stodart,	Netherton, Newton Mearns.
1889, Mar. 26: J. D.	Strang,	4 Victoria Drive, Crosshill, Glasgow.
1886, Dec. 21: James R.	Symington,	204 St. Vincent St., Glasgow.
1880, Dec. 21: Stanley	Tatham,	Montrose, Bromley Park, Bromley, Kent.
1882, Nov. 28: William	Taylor,	40 Derby Street, Glasgow.
1891, Mar. 24: Ambrose H.	Thomson,	Surveyors' Department, Court House, Marylebone Lane, London, W.
1880, Nov. 23: George	Thomson,	35 Marchmont Crescent, Edinburgh.
1884, Dec. 23: John	Thomson,	———
1884, Dec. 23: William	Thomson,	1 University Gardens Terrace, Glasgow.
1892, Jan. 26: Frederick	Thomson,	108 Buccleuch Street, Garnethill, Glasgow.
1891, Dec. 22: Cecil	Tickle,	———
1885, Oct. 27: Peter	Tod,	°/₀ James Allan & Co., Engineers, Victoria Road, Liverpool.
1887, Jan. 25: David R.	Todd,	Union Foundry, Kidsgrove, near Stoke-on-Trent, Staffordshire.
1891, Dec. 22: Norman	Trott,	60 Victoria Road, Crosshill, Glasgow.
1891, Oct. 27: Campbell	Turnbull,	18 Blythswood Square, Glasgow.
1892, Mar. 22: James	Turnbull,	South Overdale, Langside, Glasgow.
1891, Oct. 27: W. L.	Turnbull,	18 Blythswood Square, Glasgow.

Digitized by Google

1892, Jan. 26: John	Wallace, Jun.,	12 Kelvingrove Street, Glasgow.
1885, Feb. 24: Charles H.	Wannop,	Barclay, Curle & Co., Finnieston Quay, Glasgow.
1889, Oct. 22: Bruce R.	Warden,	c/o J. Watt Sandeman, Newcastle-on-Tyne.
1881, Mar. 22: Robert	Watson,	1 Glencairn Drive, Pollokshields, Glasgow.
1880, Apr. 27: Robert D.	Watt,	2 North Syechuen Road, Shanghai, China.
1884, Apr. 22: John	Weir,	Alexander Stephen & Sons, Linthouse, Govan, Glasgow.
1885, Nov. 24: James	Welsh,	3 Princess Gardens, Dowanhill, Glasgow.
1882, Nov. 28: Geo. B.	Wemyss,	105 Sword Street, Dennistoun.
1883, Dec. 18: John	Whitehead,	Cragie Road, Kilmarnock.
1890, Mar. 25: C. B.	Williams,	483 Springburn Road, Glasgow.
1890, Apr. 29: George	Wilson,	874 Govan Road, Govan, Glasgow.
1888, Apr. 24: Alex.	Woodburn,	Allan Grove, Prestwick, Ayrshire.
1887, Oct. 25: James Brown	Wyllie,	Water Engineers' Office, City Chambers, Glasgow.
1888, Jan. 24: J. Denholm	Young,	18 Derby Street, Sunderland.
1890, Jan. 21: A. Scott	Younger,	———

Digitized by Google

MEMBERS DECEASED DURING THE SESSION.

Members.

Thomas	Blackwood,	Port-Glasgow.
Charles C.	Bone,	Glasgow.
James	Clinkskill,	Glasgow.
A. C. H.	Dekke,	Bergen.
Andrew	Galloway,	Kilmarnock.
Ebenezer	Kemp,	Rothesay.
David	Laidlaw,	Skelmorlie.
John	MacMillan,	Dumbarton.
Robert	Murray,	Hull.
Alexander	Smith,	Glasgow.
Alexander	Steven,	Glasgow.
Professor James	Thomson, LL.D., F.R.S.,	Glasgow.
W. W.	Urquhart,	Dundee.
John	Weild,	Glasgow.

Associate.

John	Phillips,	Glasgow.

Graduates.

Alfred A. R.	Clinkskill,	Glasgow.
Edmund J.	Gumprecht,	Bridge of Weir.

Digitized by Google

Digitized by Google

INDEX.

PAGE

Address, Introductory—by the President, - - - - - 1
Prosperity of the Institution, - - - - - - 1
Deceased Members, - - - - - - - 2
Premiums for Papers, - - - - - - - 3
Railway Engineering, - - - - - - - 3
,, Rolling Stock, - - - - - - - 4
,, Extension, - - - - - - - 6
Canals, Docks, and Bridges, - - - - - - 9
Marine Engineering and Shipbuilding, - - - - - 12
World's Columbian Exposition, 1893, - - - - - 18
Additions to Library, - - - - - - - 313
Air—Co-efficient of Expansion of, - - - - - - 125
A New System of Electrical Distribution and Transmission—by Mr Rankin Kennedy, - - - - - - - - 221
Distribution of Electrical Energy in Towns, - - - - 221
Transformation of Currents, - - - - - - 226
Electro Motors without Commutators, - - - - - 228
Electrical Distribution of Power in Steamships, - - - 232
Electrical Distribution of Power in Mines, - - - - 233
Progress in the Adoption of Alternating and Continuous Currents, - 234
Discussion, - - - - - - - - - 235
Arden Hydraulic Lime, - - - - - - 168, 193
,, Concrete, - - - - - - - - 192
Authorities on Limes and Cements, - - - - - - 186

Blue Lias Lime, - - - - - - - - - 171
Books Added to Library, - - - - - - - 313
Brake Horse Power, - - - - - 42, 44, 51, 60, 65
Brake Trials, - - - - - - - - 41, 50
Bridges—New, - - - - - - - - - 11
Brown's New Rotary Expansive Steam Engine—by Professor Andrew Jamieson, M.Inst.C.E., F.R.S.E., etc., - - - - 33
Historical Sketch, - - - - - - - - 33
Construction of Brown's Rotary Engine, - - - - 36
Tests of Brown's Rotary Engine, - - - - - 41
Indicator Diagrams, - - - - - - - - 47
Discussion, - - - - - - - - - 50

Digitized by Google

PAGE

Callander's Pyrometer, - - - - - - 136, 144
Canals—Manchester Ship, - - - - - - - 9
,, Forth and Clyde Ship, - - - - - - 9
Cements, - - - - - - - - - 161
,, Chemical Constituents of, - - - - - - 179
,, Authorities on, - - - - - - - 186
Chemical Constituents of Cements, - - - - - - 179
Coal Consumpt, - - - - - - - - 75
Coal Cutting Machines, - - - - - - - 93
Co-efficient of Expansion of Air, - - - - - - 125
Compound Locomotives, - - - - - - - 4
Concrete, - - - - - - - - 185, 192
Cost of Electric Lighting, - - - - - - 235, 243

Danger from Electric Shocks, - - - 81, 107, 109, 113, 118
Deceased Members, - - - - - - - - 2, 301
Diagrams—Indicator, - - - - - - - 47
Discussion of Papers—

Remarks by: Mr J. Millen Adam—Forms of Bends and Junctions in Pipes, 159.—Mr John Barr—Rotary Engines, 59; Limes and Cements, 189.—Professor Barr—Rotary Engines, 50.—Mr Alex. F. G. Brown—Rotary Engines, 49.—Mr Thomas Burt—Oil Engines, 275.—Mr Sinclair Couper—Electric Motors, 219.—Mr John Crum—Pyrometers, 144.—Mr Robert Dundas (President)—Rotary Engines, 71; Electricity in Mining Work, 116; Pyrometers, 144; Limes and Cements, 191.—Mr Finlay Finlayson—Rotary Engines, 58.—Mr Hartley—Rotary Engines, 57.—Mr C. P. Hogg—Limes and Cements, 187.—Prof. Jamieson—Rotary Engines, 61; Electricity in Mining Work, 113, 115; Pyrometers, 144; Electric Motors, 218; Electrical Distribution and Transmission, 235.—Mr Ebenezer Kemp—Jet Propellers, 30.—Mr Rankin Kennedy—Electrical Distribution and Transmission, 241.—Mr C. C. Lindsay—Limes and Cements, 189.—Mr Andrew M'Ara—Limes and Cements, 192.—Mr M'Whirter—Electricity in Mining Work, 108; Forms of Pipes, 158; Electric Motors, 218; Electrical Distribution and Transmission, 237, 241.—Mr H. A. Mavor—Rotary Engines, 54, 60; Electricity in Mines, 106; Pipe Connections, 158.—Mr John Mayer—Light from Safety Lamps, 115.—Mr James Mollison—Jet Propellers, 30.—Mr Ralph Moore—Electricity in Mining Work, 103, 114, 115; Oil Engines, 275.—Mr M. B. Mountain—Oil Engines, 275.—Mr Murrie—Pyrometers, 139.—Mr T.

Digitized by Google

PAGE

B. Murray—Electrical Distribution and Transmission, 241.—Mr J. W. Ormiston—Electricity in Mining Work, 106.—Mr Andrew Paul—Rotary Engines, 56.—Mr Matthew Paul—Rotary Engines, 59, 60.—Mr J. MacEwan Ross—Rotary Engines, 58.—Mr F. J. Rowan—Electricity in Mining Work, 111, 115; Pyrometers, 136, 143; Electric Motors, 218; Electrical Distribution and Transmission, 240.—Mr George Russell—Rotary Engines, 56.—Mr John R. Ruthven—Jet Propellers, 32.—Mr W. B. Sayers—Rotary Engines, 57; Electric Motors, 217, 219; Electrical Distribution and Transmission, 239.—Professor Scorgie—Limes and Cements, 190.—Mr Ernest Scott—Electricity in Relation to Mining, 117.—Mr John Thom—Rotary Engines, 59; Bending and Connecting of Pipes, 157, 159.—Mr George C. Thomson—Pyrometers, 141, 143; Forms of Pipes, 156.

Distribution of Electric Energy, - - - - - - 221
Docks—on River Clyde, - - - - - - - 9
,, at Ardrossan, - - - - - - - 10
Donations to Library, - - - - - - - 311
Dynamos and Motors, - - - - 95, 101, 199, 209, 226, 228

Efficiency of Electrical Machinery, - - - - - 100, 114
Electric Transmission of Power, - - - - - 73, 221
,, Safety Lamp, - - - - 86, 106, 115, 116, 117
,, Pyrometers, - - - - - - - 124
,, Motors, - - - - - - 199, 226
,, Lighting, - - - - - 85, 221, 235, 241, 265
,, Shocks, - - - - - - - 81, 109, 118
,, Energy—Distribution of, - - - - - - 221
,, Engines, - - - - - - - - 251
,, Locomotives, - - - - - - - 92
Electricity in its Relation to Mining—by Mr Ernest Scott, London, - 73
Electrical Transmission of Power, - - - - - 73
Extent of Coal Mining in the United Kingdom, - - - 75
Methods of Transmitting Power, - - - - - 76
Danger of Fire from Electricity, - - - - - 79
Risk of Shocks ,, - - - - - - 81
Electrical Machinery, - - - - - - - 83
Electric Lighting, - - - - - - - 85
Firing Explosives Electrically, - - - - - - 86
Electric Bells and Signalling Apparatus, - - - - 86
,, Safety Lamps, - - - - - - 86

Digitized by Google

PAGE

Electricity in Relation to Mining (continued)—
Electric Hauling and Winding Machines, - - - - 88
,, Pumps, - - - - - - - - 89
,, Ventilating Fans, - - - - - - - 90
,, Drills, - - - - - - - - 91
,, Locomotives, - - - - - - - 92
,, Coal Cutters, - - - - - - - 93
Constructional Details of Dynamos and Motors, - - - 95
Wiring, - - - - - - - - 98
Switches, - - - - - - - - 99
Tests, - - - - - - - - - 100
Discussion, - - - - - - - - 103
Note from Mr Scott, - - - - - - - 117
Electricity in Mining Operations, - - - - - 73, 233
List of Papers on, - - - - - - - 277
Engines—Oil, - - - - - - - - 251
,, —Electric, - - - - - - - - 251
Expansion of Air, - - - - - - - - 125
Explosions in Mines, - - - - - - 82, 112
Exposition—World's Columbian, - - - - - - 13

Fischer's Pyrometer, - - - - - - - 148
Fog Signalling at Lighthouses, - - - - - - 266
Frew's Pyrometer, - - - - - - - 136, 145

Glasgow Increased Water Supply, - - - - - - 10
Glasgow—New Bridges at, - - - - - - - 11
Graduate Section, - - - - - - - - 2

Horse Power—Brake. - - - - - 42, 44, 51, 60, 65
Hydraulic Limes, - - - - - - 162, 168, 171, 193

Indicator Diagrams, - - - - - - - - 47
Installation of Electric Winding Plant, - - - - - 120
Institution—Library of, - - - - - - - 319
,, —List of Members of the, - - - - - - 321
,, —Papers Read before the, 1, 15, 33, 73, 123, 151, 161, 199, 221, 251
,, —Prosperity of the, - - - - - - - 1

Jacketting—Steam, - - - - - - - 54, 68

Digitized by Google

PAGE

Jet Propellers, - - - - - - - - 15

Lias Lime—Blue, - - - - - - - - 171
Library of the Institution, - - - - - - - 319
,, ,, Books Added, - - - - - 313
,, ,, Committee's Report, - - - - 311
,, ,, Donations, - - - - - 311
,, ,, Recommendation Book, - - - - 319
Lighthouses—Fog Signalling at, - - - - - - 266
Limes and Cements, their Nature and Properties—by Mr Alexander M'Ara, 161
Common Limes, - - - - - - - - 161
Hydraulic ,, - - - - - - - - 162
Pozzuolana, - - - - - - - - 165
Roman Cement, - - - - - - - - 167
Arden Hydraulic Lime, - - - - - - - 168
Blue Lias Lime, - - - - - - - - 171
Portland Cement, - - - - - - - - 172
Testing, - - - - - - - - - 173
Air Slaking, Cooling, and Maturing Process, - - - - 174
Chemical Constituents, - - - - - - - 179
Effect of Magnesia, - - - - - - - - 181
Use of Sand, - - - - - - - - - 182
Relative Cost of Portland Cement and Arden Hydraulic Lime, - 183
Authorities on Limes and Cements, - - - - - 186
Discussion, - - - - - - - - - 187
Limes, - - - - - - - - 161, 171, 187
Locomotives—Compound, - - - - - - - - 4
,, —Electric, - - - - - - - - 92

Machinery—Electrical—Efficiency of, - - - - 100, 114
Magnesia in Cement—Action of, - - - - - - - 181
Magnet—Electro, - - - - - - - - - 201
Magnetic Field, - - - - - - - - - 200
Manchester Ship Canal, - - - - - - - - 9
Members—Deceased, - - - - - - - - 2, 301
Members—List of, - - - - - - - - - 321
Mines—Explosions in, - - - - - - - 82, 112
Mining—Electricity Applied to, - - - - - 73, 233, 267
Minutes of Proceedings, - - - - - - - - 233
Motors—Electric, - - - - - - - - 95, 199, 228
Murrie's Pyrometer, - - - - - - - 136, 139

Digitized by Google

PAGE

New Books Added to Library, - - - - - - - 313
Note from Mr Ruthven, - - - - - - - - 31
,, Mr Ernest Scott, - - - - - - - 117
Note on Fischer's Pyrometer—by Mr George Carruthers Thomson, - 148

Ocean Transit, - - - - - - - - - 12
Office-Bearers, - - - - - - - - - iii
Oil for Motive Power, - - - - - - - - 251

Papers Read—
President's Address, - - - - - - - - 1
Ruthven's Jet Propeller, - - - - - - - 15
Brown's Rotary Expansive Steam Engine, - - - - 33
Electricity in its Relation to Mining, - - - - - 73
Professor Wiborgh's Air Pyrometers, - - - - - 123
Some New Forms of Bends and Junctions in Tubular Construction, - 151
Limes and Cements, - - - - - - - - 161
The Electric Motor, - - - - - - - - 199
A New System of Electrical Distribution and Transmission, - - 221
Priestman's Oil Engine, - - - - - - - 251
Pipe Connections, - - - - - - - - 157, 158
Pipes of Polygonal Form, - - - - - - - - 151
Portland Cement, - - - - - - - - - 172
Power—Transmission of, - - - - - - 73, 75, 105, 221
Pozzuolana, - - - - - - - - - - 165
Premiums for Papers, - - - - - - - vii, 3, 292
Priestman's Oil Engine—by Mr M. B. Mountain, - - - - 251
Methods of Obtaining Motive Power from Liquid Fuel, - - 251
Oils Used, - - - - - - - - - 252
Construction of the Priestman Oil Engine, - - - - 256
Application to Electric Lighting, - - - - - 265
,, Fog Signalling at Lighthouses, - - - - 266
,, Mining and other Work, - - - - 267
Discussion, - - - - - - - - - 275
Proceedings—Minutes of, - - - - - - - - 283
Propellers—Jet, - - - - - - - - - 15
,, —Screw, - - - - - - - - - 15
Pyrometer—Callander's, - - - - - - - 136, 144
,, Fischer's, - - - - - - - - 148
,, Frew's, - - - - - - - 136, 145
,, Murrie's, - - - - - - - 136, 139

Digitized by Google

PAGE

Pyrometers—Professor Wiborgh's—by Mr John Crum, - - - 123
Determination of High Temperatures, - - - - - 123
Varieties of Pyrometers, - - - - - - 124
Professor Wiborgh's Air Mercurial Pyrometer, - - - - 126
,, Aneroid Pyrometer, - - - - 130
Discussion, - - - - - - - - 136
Note on Fischer's Pyrometer, - - - - - - 148

Railway Progress, - - - - - - - - 3
,, Travelling—Speeds of, - - - - - - 5
Rankine, Professor, on Jet Propellers, - - - - - 28
Roman Cement, - - - - - - - - 167
Rotary Steam Engines, - - - - - - - 33
Ruthven's Jet Propeller—by Mr John R. Ruthven, - - - - 15
Historical Sketch of Trials, - - - - - - 15
Examination of the Results, - - - - - - 17
Scientific and Practical Opinions, - - - - - 23
Tables of Results, - - - - - - 27, 28, 29
Discussion, - - - - - - - - 30
Note from Mr Ruthven, - - - - - - 31

Safety Lamp—Electric, - - - - 86, 106, 115, 116, 117
Sand in Mortar, - - - - - - 82, 189, 191, 196
Ship Canals, - - - - - - - - 9
Some New Forms of Bands and Junctions in Tubular Construction—by Mr
J. Millen Adam, - - - - - - - 151
Methods of Construction, - - - - - - 151
Applications in Practice, - - - - - - 153
Mathematical Basis of the Design, - - - - - 155
Discussion, - - - - - - - - 156
Steam Engines—Rotary, - - - - - - - 33
Steam Jacketting, - - - - - - - 54, 68
Steam per Indicated Horse Power, - - - 46, 55, 59, 60, 61, 70
Steamships—Electric Appliances in, - - - - 232, 263

Tables—Steamship Propulsion, - - - - - 27, 28, 29
,, —Brake Horse Power Tests of Brown's Rotary Engine, - - 44
,, —Strength of Cements, - - - - - - 170
,, —Chemical Constituents of Arden Lime, - - - - 179
,, —Burning Oils for Motive Purposes, - - - - 254

Digitized by Google

Tables—Oil Engine Dimensions, - - - - - -
,, —Water Raised by Oil Engine, - - - - -
,, —Trials of Oil Engines, - - - - - 273
Temperature Measurements, - - - - - 123, 13
Testing Cements, - - - - - 178, 188, 189, 190
Tests of Steam Engines, - - - - - - -
The Electric Motor—by Mr W. B. Sayers, - - - - -
Object of Paper, - - - - - - - -
Elementary Principle on which the Electric Motor Depends, - -
Reversibility of the Elementary Principle of the Dynamo Machine, -
The Dynamo Machine as a Motor, - - - - -
The Dynamo Machine as a Generator, - - - - -
Constant Current, or "Series" Motors, - - - - 21
Constant Pressure, or "Shunt" Motors, - - - - 21
Discussion, - - - - - - - - 217
Transmission of Electric Currents, - - - - - - 226
,, Power, - - - - - 73, 75, 105, 113, 221
Trials—Brake, - - - - - - - - 41, 50
,, —Steamship, - - - - - - - - 16
,, ,, Tables of, - - - - - 27, 28, 29

Water Supply—Glasgow, - - - - - - - 10
Wiborgh's Pyrometers, - - - - - - - 123
Winding Machine—Electric, - - - - - - 88
Winding Plant—Installation of Electric, - - - - - 120
World's Columbian Exposition, 1893, - - - - - 13

WILLIAM MUNRO, Steam Power Printer, 80 Gordon Street, Glasgow.

Digitized by Google

Digitized by Google

Digitized by Google

Digitized by Google

Digitized by Google

Digitized by Google

Digitized by Google

Digitized by Google

Digitized by Google

Digitized by Google

Digitized by Google

Fig. 1.

Fig. 2.

Digitized by Google

Digitized by Google

Proceedi
in

Digitized by Google

Digitized by Google

Digitized by Google

Digitized by Google

Digitized by Google

Digitized by Google

Digitized by Google

Digitized by Google

Digitized by Google

Digitized by Google